TRIBAL RESEARCH INSTITUTE

Tura, West Garo hills district, Meghalaya

ESTIMATES (PHASE 1)

client

Directorate of Art & Culture,
Government of Meghalaya (DAC)

submitted by

archohm consults pvt. ltd
c 28c sector 8
noida

ESTIMATES

THIS PAGE IS INTENTIONALLY LEFT BLANK

Government of Meghalaya			
Name of Work :- Tribal Research Institute,Tura, Meghalaya			
Grand Summary (Phase -1)			
S. no	**Description**		**Amount**
1	Total of Civil & Finishing Works	Rs.	
2	Total of Plumbing Works	Rs.	
3	Total of Fire Fighting Works	Rs.	
4	Total of Electrical Works	Rs.	
7	Total of Hvac Works	Rs.	
8	Total of Horticulture Works	Rs.	
	Total Amount of (Phase -1)		

ESTIMATE

OF CIVIL&FINISHING WORKS

THIS PAGE IS INTENTIONALLY LEFT BLANK

SUMMARY (CIVIL & FINISHING WORKS)		
S. No.	**ITEM OF CIVIL WORK**	**AMOUNT**
1	HOSTEL BLOCK	
2	EXTERNAL DEVELOPMENT	
	TOTAL OF CIVIL & FINISHING WORKS	

SUMMARY (HOSTEL BLOCK)

S. No.	ITEM OF CIVIL WORK	AMOUNT		
1.00	**Chapter – 1 - Earth Work**	Rs.		
2.00	**Chapter – 2 - Cement Concrete Works**	Rs.		
3.00	**Chapter – 3 - Flooring Works**	Rs.		
4.00	**Chapter – 4 - Masonry Works**	Rs.		
5.00	**Chapter – 5 - Plastering Works**	Rs.		
6.00	**Chapter – 6 - Ceiling, Wall Lining and Partition Works**	Rs.		
7.00	**Chapter – 7 - Roofing Works**	Rs.		
8.00	**Chapter – 8 - Wood Work**	Rs.		
9.00	**Chapter – 9 - Aluminium Work**	Rs.		
10.00	**Chapter – 12 - Door and Window Fittings**	Rs.		
11.00	**Chapter – 19 - Plinth Protection and Drains**	Rs.		
12.00	**Chapter – 22 - Water Proofing and Roof Treatment**	Rs.		
13.00	**Chapter – 24 - Anti-Termite Treatment Works**	Rs.		
14.00	**Market Rate Items**	Rs.		
Total		Rs.		

Item No.	MPWD 2015-16 / DSR 2018	Description of Item	Quantity	Unit	Rate Rs.	Amount Rs.	
1.00	**1.0**	**Chapter – 1 - Earth Work**					
1.01	1.1	Earthwork in excavation upto a depth of 2m below the existing ground level for foundation trenches of foundations, footings of column/ walls, retaining walls, septic tank etc. including bailing out water where necessary and removal of surplus earth with all lead and lifts as directed and specified for the following classification of soils.					
		In ordinary soil	1590.00	Cum	179.00		/-
1.02	1.1.1	Extra over item no.1.1 above for each 1m depth or part thereof beyond the initial depth of 2m	1273.00	Cum	77.00		/-
1.03	1.4	Earthwork in filling including necessary carriage, watering, ramming etc. complete as directed and specified.					
	1.4.1	Earth/ Sand filling in plinth in layers not exceeding 150mm thick					
	(b)	With available excavated earth including breaking of clods, consolidating each layer by ramming and watering with all lead and lifts.	318.00	Cum	210.00		/-
		Total Earth Work :					

Item No.	MPWD 2015-16 / DSR 2018	Description of Item	Quantity	Unit	Rate Rs.	Amount Rs.	
2.00	**2.0**	**Chapter – 2 - Cement Concrete Works**					
2.01	2.1	Plain cement concrete works with coarse aggregate of sizes 13mm to 32mm in foundation bed for footing steps, walls, brick works etc. as directed and specified including dewatering if necessary, and curing complete (shuttering where necessary shall be measured and paid separately).					
		In prop. 1:4:8 (1 cement:4 coarse sand : 8 coarse agg. by volume (using mixture machine)	88.00	Cum			/-
2.02	2.6	Providing and laying Concrete in Reinforced Cement Concrete Works Using Batching Plant/ RMC/ Truck mounted batching plant including Transit Mixer and Concrete Pump with coarse sand & 20mm down graded stone aggregate including dewatering if necessary, and curing complete with all necessary laboratory tests etc. but excluding cost of form work and reinforcement for reinforced cement concrete work (form work and reinforcement will be measured and paid separately). (Without using admixture, plasticiser)					
		RCC Grade M35	1144.00	Cum			/-
2.03	2.8	Supplying, fitting and fixing in position reinforcement bars upto 1st floor level, conforming to relevant I.S. Code for R.C.C. work/ R.B. walling including straightening, cleaning, cutting and bending to proper shapes and length as per details, supplying and binding with 20G annealed black wire and placing in position with proper blocks, supports, chairs, spacers etc. complete. (Rates inclusive of all wastage, lappage, hooks, chairs, anchorage etc. and no measurements for the same is required)					
	a)	From Primary Sources like TATA/ SAIL/ ESSAR/ JINDAL/ SHYAM/ RINL					
	(i)	TMT Corrosion resistant steel (CRS) reinforcement bar	1643.00	Qntl			/-
2.04	2.90	Extra over item 2.8 (a, b, c) above for each subsequent floor or part thereof above first floor level.	955.00	Qntl			/-
2.05	2.10	Providing form work of ordinary timber planking of thickness not less than 25mm and removal of the same for concrete members so as to give a rough finish including centering, shuttering, strutting and propping etc., for height of propping and centering of supporting floor to the soffit of the concrete member not exceeding 4.0M as specified for the following items:					
	a)	Foundation, footings, bases of columns, pile cap, raft and mass concrete works etc.	257.00	Sqm			/-
	g)	Vertical surface such as walls (any thickness), parapet walls, partitions, walls of septic tank, inspection pit etc. including attached pilasters, buttresses, plinth and string courses and the like.	196.00	Sqm			/-

Item No.	MPWD 2015-16 / DSR 2018	Description of Item	Quantity	Unit	Rate Rs.	Amount Rs.	
2.06	2.11	Providing form work of 12mm thick Plywood Board and removal of the same for concrete members so as to give a rough finish including centering, shuttering, strutting and propping etc., for height of propping and centering of supporting floor to the soffit of the concrete member not exceeding 4.0M as specified for the following items:					
	(a)	Columns, Pillars, Posts & Strut of square/ rectangular/ polygonal in plan or any shape like Tee/L etc. having plane vertical face	937.00	Sqm			/-
	(b)	Sides and Soffits of Beams, beam haunchings, cantilever girders, bressumers, lintels and horizontal ties. For depth exceeding 1.0M.	2250.00	Sqm			/-
	(c)	Flat Surfaces such as soffits of suspended floors, roofs, landings, cantilever slabs, chajjas, balconies and the like. Floors etc. upto 200mm in thickness.	1867.00	Sqm			/-
	(e)	Staircase with sloping or stepped soffits including risers and stringers but excluding Landing.	49.00	Sqm			/-
2.07	2.5.3	In Columns, pillars, posts, struts, suspended floor, roof, landing, shelf and support, balcony, lintel, sill band, beam, girder, bressumer, cantilever, staircase etc. above plinth level upto 1st floor level. (Without using admixture, plasticiser)					
		M15 or Prop. 1:2:4 (For Non-structural Works)	1.00	Cum			/-
		Total Cement Concrete Works :					
3.00	**3.0**	**Chapter – 3 - Flooring Works**					
3.01	3.42	Providing polished granite slab of approved quality, size, shape and thickness not less than 18 mm on floors, skirting, treads and risers of steps over cement mortar bed 15 mm thick in prop. 1:3 (1 cement : 3 coarse sand) including cutting where necessary finished with flush pointing with Fix-A-Tile Choksey/Sika/Pidilite/Rouf) /white cement slurry mixed with approved pigment to match the shade of granite slab, complete at all levels as specified and directed. (Cement plastering to be measured and paid separately). (Coloured pigment should be in conformity with colour of slab and as approved and directed by the Department).					
		Executive Quality	1008.00	Sqm			/-
3.02	3.31	Kota-stone slab flooring of 18 mm thick over 20mm thick base of cement plaster 1:6 (1 cement : 6 coarse sand) laid over and jointed with grey cement slurry mixed with pigment to match the shade of the slab including rubbing and polishing complete.					
		Slab above 0.4sq.m. size	656.00	Sqm			/-

Item No.	MPWD 2015-16 / DSR 2018	Description of Item	Quantity	Unit	Rate Rs.	Amount Rs.	
3.03	3.32	Kota stone slab of 18 mm thick in riser of steps, skirting, dado and pillars laid with 10mm thick cement plaster 1:3 (1 cement : 3 coarse sand) and jointed with grey cement slurry mixed with pigment to match the shade of the slabs including rubbing and polishing complete.					
		Slab above 0.4sq.m. size	99.00	Sqm			/-
3.04	3.27	Providing VITRIFIED floor tiles of Somany/ Orient/ Nitco/ Qutone make or equivalent of approved quality of specified size, shape and thickness not less than 18mm on floors, skirting, risers and treads of steps over 15 mm thick base of cement mortar in prop. 1:3 (1 cement : 3 coarse sand) including cutting where necessary finished with flush pointing with Fix-A-Tile (Choksey/Sika/Pidilite/Rouf) / white cement slurry mixed with approved pigment to match shade of tiles, mixed with approved pigment to match the shade of the tiles, complete at all levels as specified and directed. (Cement plastering to be measured and paid separately). (Coloured pigment should be in conformity with colour of tiles and as approved and directed by the Department)					
		Premium range	204.00	Sqm			/-

Item No.	MPWD 2015-16 / DSR 2018	Description of Item	Quantity	Unit	Rate Rs.	Amount Rs.	
3.05	3.28	Providing polished VITRIFIED wall tiles of Somany/ Orient/ Nitco/ Qutone make or equivalent of approved quality, size, shape and thickness not less than 8mm on walls and skirting over cement mortar bed 10 mm thick in prop. 1:3 (1 cement : 3 coarse sand) including cutting where necessary finished with flush pointing with Fix-A-Tile (Choksey / Sika / Pidilite / Rouf) or white cement slurry mixed with approved pigment to match shade of tiles complete at all levels as specified and directed. (Cement plastering to be measured and paid separately).					
		Premium range	9556.00	Sqm			/-
3.06	DSR 2018/ 11.55	Providing and laying flamed finish Granite stone flooring in required design and patterns, in linear as well as curvilinear portions of the building all complete as per the architectural drawings with 18 mm thick stone slab over 20 mm (average) thick base of cement mortar 1:4 (1 cement : 4 coarse sand) laid and jointed with cement slurry and pointing with white cement slurry admixed with pigment of matching shade including rubbing, curing and polishing etc. all complete as specified and as directed by the Engineer-in-Charge :					
	DSR 2018/ 11.55.1	Flamed finish granite stone slab Jet Black, Cherry Red, Elite Brown, Cat Eye or equivalent.	1270.00	Sqm			/-
	DSR 2018/ 8.2	Providing and fixing 18 mm thick gang saw cut, mirror polished, premoulded and prepolished, machine cut for kitchen platforms, vanity counters, window sills, facias and similar locations of required size, approved shade, colour and texture laid over 20 mm thick base cement mortar 1:4 (1 cement : 4 coarse sand), joints treated with white cement, mixed with matching pigment, epoxy touch ups, including rubbing, curing, moulding and polishing to edges to give high gloss finish etc. complete at all levels.					
	DSR 2018/ 8.2.2	Granite of any colour and shade					
3.07	DSR 2018/ 8.2.2.2	Area of slab over 0.50 sqm	38.00	Sqm			/-
3.08	DSR 2018/ 8.4	Extra for fixing marble /granite stone, over and above corresponding basic item, in facia and drops of width upto 150 mm with epoxy resin based adhesive, including cleaning etc. complete.	100.00	metre			/-
3.09	DSR 2018/ 8.5	Extra for providing opening of required size & shape for wash basin/kitchen sink in kitchen platform, vanity counter and similar location in marble/ Granite/ stone work, including necessary holes for pillar taps etc. including moulding, rubbing and polishing of cut edges etc. complete.	40.00	each			/-

Item No.	MPWD 2015-16 / DSR 2018	Description of Item	Quantity	Unit	Rate Rs.	Amount Rs.	
3.1	DSR 2018/ 8.10	Providing and fixing stone slab with table rubbed, edges rounded and polished, of size 75x50 cm deep and 1.8 cm thick, fixed in urinal partitions by cutting a chase of appropriate width with chase cutter and embedding the stone in the chase with epoxy grout or with cement concrete 1:2:4 (1 cement : 2 coarse sand : 4 graded stone aggregate 6 mm nominal size) as per direction of Engineer-in-charge and finished smooth.					
	DSR 2018/ 8.10.2	Granite Stone of approved shade	7.00	Sqm			/-
3.11	Analysed on DSR	Granite stone slab 18 mm thick in risers of steps, skirting, dado and pillars laid on 12 mm (average) thick cement mortar 1:3 (1 cement : 3 coarse sand) and jointed with grey cement slurry mixed with pigment to match the shade of the slab, including rubbing and polishing complete.	224.00	Sqm			/-
3.12	3.25	Providing Ceramic Tiles of Somany/ Orient/ Nitco/ Qutone make or equivalent of approved quality, size, shape and thickness not less than 8 mm on floors, skirting, treads and risers of steps over cement mortar bed 15 mm thick in prop. 1:3 (1 cement : 3 coarse sand) including cutting where necessary finished with flush pointing with fix-A Tile Choksey/ Sika/ Pidilite/ Rouf/ White cement slurry mixed with approved pigment to match the shade of tiles, complete at all levels as specified and directed (cement plastering to be measured and paid separately).					
	3.25.1	Normal range (sizes 300mmx300mm and above)					
	(a)	Premium Range	11.00	Sqm			/-
3.13		Providing polished ceramic wall tiles of Somany/ Orient/ Nitco/ Qutone make or equivalent of approved quality, size, shape and thickness not less than 8mm on walls and skirting over cement mortar bed 10 mm thick in prop. 1:3 (1 cement : 3 coarse sand) including cutting where necessary finished with flush pointing with Fix-A-Tile (Choksey / Sika / Pidilite / Rouf) or white cement slurry mixed with approved pigment to match shade of tiles complete at all levels as specified and directed. (Cement plastering to be measured and paid separately).					
		Executive range- 1 (Sizes 200 mm x 300mm and above)					
	(a)	Premium Range	51.00	Sqm			/-
		Total Flooring Work :					

Item No.	MPWD 2015-16 / DSR 2018	Description of Item	Quantity	Unit	Rate Rs.	Amount Rs.	
4.00	**4.0**	**Chapter – 4 - Masonry Works**					
4.01	4.16	Autoclave Aerated Concrete Block work using AAC block conforming to IS-2185 (Part-III) in cement mortar in prop 1:5 (1 cement: 5 sand) including racking out joints and curing complete as per specification and as directed.					
	a)	In Sub-structure upto plinth level including dewatering if necessary					
	iii)	AAC Blocks of size 600mm x 200mm x 150mm	7.00	Cum			/-
4.02	b)	In superstructure above plinth level up to 1st floor level.					
	iiii)	AAC Blocks of size 600mm x 200mm x 150mm	89.00	Cum			/-
4.03	c)	Extra over item no. 4.16 above for AAC Block work in each subsequent floor or part thereof above 1st floor level.	1.00	Cum			/-
4.04	4.19	125mm thick wall using Autoclave Aerated Concrete Block (AAC block) conforming to IS-2185 (Part-III) in cement mortar in prop 1:5 (1 cement : 5 sand) including racking out joints and curing complete as per specification and as directed in super structure above plinth up to 1st floor level (protruding rod is to be provided at every 3 course interval and will be measured and paid separately).	793.00	Sqm			/-
4.05	4.21	Extra for AAC Block walling for each subsequent floor or part thereof above the 1st floor level over Item No. 4.17, 4.18, 4.19 & 4.20 above.	419.00	Sqm			/-
4.06	4.2	Filling sunken floor with broken brick bats/ Stone aggregates and sand including compacting and supplying of materials complete as specified and directed for all levels.					
		brick bats	72.00	Cum			/-
4.07	4.2.1	Extra cost for lifting of brickbats/Stone soling and sand for filling of sunk floor for each subsequent floors above the ground floor as directed and specified.	72.00	Cum			/-
		Total Masonry Works :					
5.00	**5.0**	**Chapter – 5 - Plastering Works**					
5.01	5.1	10 mm thick Cement plaster in single coat on fair side of brick/concrete walls for interior plastering up to 1st floor level including arises or rounded angles not exceeding 80mm girth and finished even and smooth including curing complete as directed.					
		In cement mortar 1:6	12589.00	Sqm			/-
5.02	15.35	Providing surface preparation for walls, celling etc. using average 2 mm thick plaster of paris including clearing, rubbing with sand paper, filling gaps, depression etc. where necessary, with chalk powder and plaster of paris paste, making the surface even and smooth complete at all levels as specified and directed.	3033.00	Sqm			/-

Item No.	MPWD 2015-16 / DSR 2018	Description of Item	Quantity	Unit	Rate Rs.	Amount Rs.	
5.03	15.40	Wall painting (two coats) with acrylic emulsion paint approved brand and manufacture (Asian paint/ Berger paint/ ICI paint/ J & N paint/ Nerolac) on new surface to give an even shade after thoroughly brushing the surfaces free from mortar droppings and other foreign matter and sand papered smooth.	3033.00	Sqm			/-
5.04	15.41	Extra over item no 15.40 above for every subsequent coat of wall painting with acrylic emulsion paint of approved brand and manufacture (Asian paint/ Berger paint/ ICI paint/ J & N paint/ Nerolac).	3033.00	Sqm			/-
5.05	DSR 2018/ 13.114	Melamine polishing on wood work (one or more coat).	276.00	Sqm			/-
		Total Plastering Work :					
6.00	**6.0**	**Chapter – 6 - Ceiling, Wall Lining and Partition Works**					
6.01	DSR 2018/ 12.52	Providing and fixing tiled false ceiling of specified materials of size 595x595 mm in true horizontal level, suspended on inter locking metal grid of hot dipped galvanized steel sections (galvanized @ 120 grams/ sqm, both side inclusive) consisting of main "T" runner with suitably spaced joints to get required length and of size 24x38 mm made from 0.30 mm thick (minimum) sheet, spaced at 1200 mm center to center and cross "T" of size 24x25 mm made of 0.30 mm thick (minimum) sheet, 1200 mm long spaced between main "T" at 600 mm center to center to form a grid of 1200x600 mm and secondary cross "T" of length 600 mm and size 24x25 mm made of 0.30 mm thick (minimum) sheet to be interlocked at middle of the 1200x600 mm panel to form grids of 600x600 mm and wall angle of size 24x24x0.3 mm and laying false ceiling tiles of approved texture in the grid					

Item No.	MPWD 2015-16 / DSR 2018	Description of Item	Quantity	Unit	Rate Rs.	Amount Rs.	
		including, required cutting/making, opening for services like diffusers, grills, light fittings, fixtures, smoke detectors etc. Main"T" runners to be suspended from ceiling using GI slotted cleats of size 27 x 37 x 25 x1.6 mm fixed to ceiling with 12.5 mm dia and 50 mm long dash fasteners, 4 mm GI adjustable rods with galvanised butterfly level clips of size 85 x 30 x 0.8 mm spaced at 1200 mm center to center along main T, bottom exposed width of 24 mm of all T-sections shall be pre-painted with polyester paint, all complete for all heights as per specifications, drawings and as directed by Engineer-in-charge.					
	DSR 2018/ 12.52.1	GI Metal Ceiling Lay in plain Tegular edge Global white color tiles of size 595x595 mm, and 0.5 mm thick with 8 mm drop; made of G I sheet having galvanizing of 100 gms/sqm (both sides inclusive) and electro statically polyester powder coated of thickness 60 microns (minimum), including factory painted after bending.	204.00	Sqm			/-
		Total Ceiling, Wall Lining and Partition Works :					
7.00	**7.0**	**Chapter – 7 - Roofing Works**					
7.01	7.13	Providing thatch roofing with sun grass (Ullo) in layer of 75 mm thick with half spilt bamboo fillet and tying with galvd. wire complete as directed.					
	a)	150 mm thick.	2294.00	Sqm			/-
7.02	7.14	Providing and laying thatching, capping to ridge and hip with new sun grass of 75 mm thick (fine work) stiffened with bamboo slips of size 30mm x 6mm and tied with galvd. tying wire complete as directed.	246.00	metre			/-
		Total Roofing Works :					
8.00	**8.0**	**Chapter – 8 - Wood Work**					
8.01	8.2	Providing wood work in frame (chowkats) of doors, windows, clerestory windows and other similar works wrought, framed and fixed in position in contact with C.C or brick masonry wall including supplying, fitting and fixing with M.S. hold fast (40mmx3mmx250mm) as per design embedded in cement concrete block in proportion 1:2:4 and with two coats of kiricide oiling to the timber faces in contact with C.C and masonry as directed and specified.					
		With Sal wood	6.00	Cum			/-
8.02	8.29	Providing and fixing flush door shutters solid core construction with frame of 1st class hard wood with cross band and face veneered ply wood face panels conforming to relevant I.S code including oxidised iron butt hinges (100mm x 75mm x 3.5mm) with necessary wood screws.					
		Non-decorative type face panels and block board core 35 mm thick	268.00	Sqm			/-

Item No.	MPWD 2015-16 / DSR 2018	Description of Item	Quantity	Unit	Rate Rs.	Amount Rs.	
8.03	8.15	Providing 1st Class Local timber (Pooma/ Hollock/ Oak/ Gamari/ Diengrai and the like) ventilating louvre in 50mm x 38mm size wooden frame with 150mm x 20mm slate made of 1st class local wood including fitting and fixing with nails and painting with two coats of kiricide oiling complete.	794.00	Sqm			/-
8.04	DSR 2018/ 9.23	Extra for providing lipping with 2nd class teak wood battens 25 mm minimum depth on all edges of flush door shutters (over all area of door shutter to be measured).	268.00	Sqm			/-
8.05	DSR 2018/ 9.127	Providing & Fixing decorative high pressure laminated sheet of plain / wood grain in gloss / matt/ suede finish with high density protective surface layer and reverse side of adhesive bonding quality conforming to IS : 2046 Type S, including cost of adhesive of approved quality.					
	DSR 2018/ 9.127.1	1.5 mm thick	260.00	Sqm			/-
8.06	DSR 2018/ 8.29	Providing and fixing 4mm thick coir veneer board, ISI marked IS : 14842, plain lining with necessary screws, priming coat on unexposed surface etc., complete.	276.00	Sqm			/-
		Total Wood Works :					
9.00	**9.0**	**Chapter – 9 - Aluminium Work**					
9.01	DSR 2018/ 21.18	Providing and fixing 12 mm thick frameless toughened glass door shutter of approved brand and manufacture, including providing and fixing top & bottom pivot & double action hydraulic floor spring type fixing arrangement and making necessary holes etc. for fixing required door fittings, all complete as per direction of Engineer-incharge (Door handle, lock and stopper etc.to be paid separately).	5.00	Sqm			/-
9.02	DSR 2018/ 21.12	Providing and fixing aluminium tubular handle bar 32 mm outer dia, 3.0 mm thick & 2100 mm long with SS screws etc .complete as per direction of Engineer-in-Charge.					
	DSR 2018/ 21.12.2	Powder coated minimum thickness 50 micron aluminium tubular handle bar	4.00	each			/-
9.03	DSR 2018/ 10.25	Steel work welded in built up sections/ framed work, including cutting, hoisting, fixing in position and applying a priming coat of approved steel primer using structural steel etc. as required.					
	DSR 2018/ 10.25.2	In gratings, frames, guard bar, ladder, railings, brackets, gates and similar works	2166.00	Kgs			/-
		Total Aluminium Works :					
10.00	**12.0**	**Chapter – 12 - Door and Window Fittings**					
10.01	12.4	Supplying, fitting, fixing Stainless Steel fittings of approved make, reasonably smooth, free from sharp edges and corners, flaws and other defects and with counter sunk holes for screws including necessary C.P. brass screws etc. complete. (bright natural matt & satin finished)					
a)	a)	**Sliding Door Bolt**					
	ii)	250x16 mm	254.00	Each			/-
b)	b)	**Tower Bolt**					

Item No.	MPWD 2015-16 / DSR 2018	Description of Item	Quantity	Unit	Rate Rs.	Amount Rs.	
	i)	250x10 mm	161.00	Each			/-
c)	c)	**Door Handle**					
	iii)	150mm	263.00	Each			/-
d)	e)	**Butt hinge**					
	i)	125mm x 50mm x 2.5mm	969.00	Each			/-
10.02	12.3	Supplying, fitting, fixing brass fittings of approved make, reasonably smooth, free from sharp edges and corners, flaws and other defects and with counter sunk holes for screws including necessary C.P. brass screws etc. complete. (bright natural matt & satin finished)					
	(o)	Mortice Locks cylindrical type (Godrej make polished brass)	104.00	Each			/-
10.03	12.7	Providing, fitting and fixing Heavy duty Door Closer (Godrej make) of size 180mm x 65mm x 64mm complete as specified and directed by the department.	108.00	Each			/-
		Total Door & Window fittings :					

Item No.	MPWD 2015-16 / DSR 2018	Description of Item	Quantity	Unit	Rate Rs.	Amount Rs.	
11.00	**19.0**	**Chapter – 19 - Plinth Protection and Drains**					
11.01	19.1	Plinth Protection by providing 50mm thick Cement Concrete base in prop 1:3:6 (1 cement:3 coarse sand : 6 coarse agg. of 20mm nominal size) with a layer of 10mm thick cement plaster in prop 1:3 and finishing with a floating coat of neat cement including necessary levelling and preparing the subgrade complete as directed	185.00	Sqm			/-
		Total Plinth Protection and Drains work :					
12.00	**22.0**	**Chapter – 22 - Water Proofing and Roof Treatment**					
12.01	DSR 2018/ 22.1	Providing and laying integral cement based treatment for water proofing on horizontal surface at all depth below ground level for under ground structures as directed by Engineer-in-Charge and consisting of :					
		(i) Ist layer of 22 mm to 25 mm thick approved and specified rough stone slab over a 25 mm thick base of cement mortar 1:3 (1 cement : 3 coarse sand) mixed with water proofing compound conforming to IS:2645 in the recommended proportion over the leveling course (leveling course to be paid separately). Joints sealed and grouted with cement slurry mixed with water proofing compound.					
		(ii) 2nd layer of 25 mm thick cement mortar 1:3 (1 cement: 3 coarse sand) mixed with water proofing compound in recommended proportions. (iii) Finishing top with stone aggregate of 10 mm to 12 mm nominal size spreading @ 8 cudm/sqm thoroughly embedded in the 2nd layer.					
	DSR 2018/ 22.1.1	Using rough kota stone.	1286.00	Sqm			/-
12.02	DSR 2018/ 22.2	Providing and laying integral cement based treatment for water proofing on the vertical surface by fixing specified stone slab 22 mm to 25 mm thick with cement slurry mixed with water proofing compound conforming to IS:2645 in recommended proportions with a gap of 20 mm (minimum) between stone slabs and the receiving surfaces and filling the gaps with neat cement slurry mixed with water proofing compound and finishing the exterior of stone slab with cement mortar 1:3 (1 cement : 3 coarse sand) 20 mm thick with neat cement punning mixed with water proofing compound in recommended proportion complete at all levels and as directed by Engineer-in-charge :					
	DSR 2018/ 22.2.1	Using rough kota stone.	625.00	Sqm			/-

Item No.	MPWD 2015-16 / DSR 2018	Description of Item	Quantity	Unit	Rate Rs.	Amount Rs.	
12.03	DSR 2018/ 22.26	Providing and applying of swellable type water stop tape, 19mm x 25mm thick in linear meter (expansive nature) for construction joints treatment of RCC structure such as raft slab, retaining walls, water storage tank and at the junctions of raft slab with the retaining walls etc.. After cleaning the surface, one coat of required primer for swellable water stop tape shall be applied throughout the length of the joint @3.78 litre per 240 running meter. Over the primed surface swellable type water stop tape shall be placed. The work shall be carried out all complete as per specification and the direction of the Engineer-In-Charge. The product performance shall carry guarantee for 10 years against any leakage.	477.00	metre			/-
12.04	DSR 2018/ 22.3	Providing and laying water proofing treatment to vertical and horizontal surfaces of depressed portions of W.C., kitchen and the like consisting of:					
		(i) Ist course of applying cement slurry @ 4.4 kg/sqm mixed with water proofing compound conforming to IS 2645 in recommended proportions including rounding off junction of vertical and horizontal surface.					
		(ii) IInd course of 20 mm cement plaster 1:3 (1 cement : 3 coarse sand) mixed with water proofing compound in recommended proportion including rounding off junction of vertical and horizontal surface.					
		(iii) IIIrd course of applying blown or residual bitumen applied hot at 1.7 kg. per sqm of area.					
		(iv) IVth course of 400 micron thick PVC sheet. (Overlaps at joints of PVC sheet should be 100 mm wide and pasted to each other with bitumen @ 1.7 kg/sqm).	474.00	Sqm			/-
		Total Water Proofing work :					
13.00	**24.0**	**Chapter – 24 - Anti-Termite Treatment Works**					
13.01	24.1	Pre-construction anti - termite treatment at the bottom of foundation pits and walls on either side up to a height of 300mm from bottom of the excavation made for column plinth beam, wall, trenches etc. by applying the emulsion @ 5 (five) litres per square meter of the surface area before starting construction work (supplying of necessary tools and accessories by the contractor) as per the direction of the Department complete.					
		With aqueous emulsion having concentration 1:499 with Premise 350 SC (Imidachloprid 30.5% SC) and water, i.e. 0.07% in water.	869.00	Sqm			/-

Item No.	MPWD 2015-16 / DSR 2018	Description of Item	Quantity	Unit	Rate Rs.	Amount Rs.	
13.02	24.2	Pre-construction anti - termite treatment in the back fill in immediate contact with the foundation structure after completion, column, wall etc. to a depth of 450mm and width 300mm (when required refill in 200mm thick layers) applying the emulsion @ 5 (five) litres per square meter towards the concrete and masonry walls so as to ensure earth in contact with the structure well treated - with chemical (supplying of necessary tools and accessories by the contractor) as per the direction of the Department complete.					
		With aqueous emulsion having concentration 1:499 with Premise 350 SC (Imidachloprid 30.5% SC) and water, i.e. 0.07% in water.	869.00	Sqm			/-
13.03	24.3	Pre-construction anti-termite treatment by applying in the entire levelled area after plinth filling and before laying floor by applying the emulsion @ 5 (five) litres per square meter of the surface to be spread with light rodding so as to ensure proper absorption by the filled up earth (supplying of necessary tools and accessories by the contractor) as per the direction of the Department complete.					
		With aqueous emulsion having concentration 1:499 with Premise 350 SC (Imidachloprid 30.5% SC) and water, i.e. 0.07% in water.	869.00	Sqm			/-
		Total Anti-Termite Treatment Works :					
14.00	**MR**	**Market Rate Items**					
14.01	MR	Providing and fixing STURCTURAL GLAZING to fixed panels with no aluminium section exposed to outside and only glass panels with silicon joint visible from outside. The system specially designed with aluminium section of grade 63400 WP IS:733 and IS 1285 pure polyester powder coated in approved shade and colour with mullion fixed to beams/columns through adequately designed MS painted anchor brackets and expansion fasteners as required. The design to be as per BIS code for required wind pressure IS:875 part III and use of aluminium section alloy as per IS:8147. System design to strictly consider for thermal movement, air infiltration, water penetration, seismic movement and structural movement. Silicon sealant structural grade and weathering grade shall be “Dow corning – USA” or “GE Silicon – USA” or “WACKER – Germany” as per the design requirement					
	b)	Providng and fixing st. glazing using 24 mm thick DGU soft coated glass	18.00	Sqm			/-
		Total Market Rate Items :					

S No.	Item Description	Nos	Length	Width	Height	Quantity	Unit
1.00	**Chapter – 1 - Earth Work**						
1.01	**Earthwork in excavation upto a depth of 2m below the existing ground level for foundation trenches of foundations, footings of column/ walls, retaining walls, septic tank etc. including bailing out water where necessary and removal of surplus earth with all lead and lifts as directed and specified for the following classification of soils.**						
	In ordinary soil						
	Hostel Block						
		1	1500.00			1500.00	
	UGT Tank	1	9.30	6.10	4.70	266.63	
						1766.63	**Cum**
1.02	**Extra over item no.1.1 above for each 1m depth or part thereof beyond the initial depth of 2m**						
	Hostel Block						
		1	375.00		1.00	375.00	
		2	375.00		1.00	750.00	
	UGT Tank	1	9.30	6.10	1.00	56.73	
		2	9.30	6.10	1.00	113.46	
		3	9.30	6.10	0.70	119.13	
						1414.32	**Cum**
1.03	**Earthwork in filling including necessary carriage, watering, ramming etc. complete as directed and specified.**						
	Earth/ Sand filling in plinth in layers not exceeding 150mm thick						
b)	**With available excavated earth including breaking of clods, consolidating each layer by ramming and watering with all lead and lifts.**						
	Considerd 20% for back filling qty					353.33	
						353.33	**Cum**
2.00	**Chapter – 2 - Cement Concrete Works**						
2.01	**Plain cement concrete works with coarse aggregate of sizes 13mm to 32mm in foundation bed for footing steps, walls, brick works etc. as directed and specified including dewatering if necessary, and curing complete (shuttering where necessary shall be measured and paid separately)**						
	In prop. 1:4:8 (1 cement:4 coarse sand : 8 coarse agg. by volume (using mixture machine)						
	Hostel Block						
		1	92.20			92.20	
	UGT Tank	1	8.70	5.50	0.10	4.79	
						96.99	**Cum**
2.02	**Providing and laying Concrete in Reinforced Cement Concrete Works Using Batching Plant/ RMC/ Truck mounted batching plant including Transit Mixer and Concrete Pump with coarse sand & 20mm down graded stone aggregate including dewatering if necessary, and curing complete with all necessary laboratory tests etc. but excluding cost of form work and reinforcement for reinforced cement concrete work (form work and reinforcement will be measured and paid separately). (Without using admixture, plasticiser)**						
	RCC Grade M35						
	Hostel Block						
	Below plinth						
	Foundation	1	168.00			168.00	
	Grade slab	1	184.00			184.00	
	Column	1	49.00			49.00	
	Shear wall	1	111.00			111.00	
	Beam	1	115.00			115.00	
	UGT Tank						
	UGT Tank Raft	1	8.50	5.30	0.40	18.02	
	UGT Tank RCC Wall	2	7.60	0.20	4.00	12.16	
	UGT Tank RCC Wall	3	4.00	0.20	4.00	9.60	
	Roof slab	1	7.60	4.40	0.20	6.69	
	Above plinth						
	Column	1	98.00			98.00	
	Beam	1	230.00			230.00	
	Slab	1	243.00			243.00	
	Staircase						
	Ground Floor to first Floor						
	Landing	1	3.27	1.50	0.15	0.74	

S No.	Item Description	Nos	Length	Width	Height	Quantity	Unit
	Waist Slab	2	2.25	1.50	0.15	1.01	
	Landing	1	3.00	2.00	0.15	0.90	
	Waist Slab	2	2.25	3.00	0.15	2.03	
	First Floor to 2nd floor						
	Landing	1	3.27	1.50	0.15	0.74	
	Waist Slab	2	2.25	1.50	0.15	1.01	
	Landing	1	3.00	2.00	0.15	0.90	
	Landing	1	8.80		0.15	1.32	
	Waist Slab	2	2.25	3.00	0.15	2.03	
	Landing (Ramp)	1	3.00	1.50	0.15	0.68	
	2nd Floor to terrace						
	Landing	1	3.27	1.50	0.15	0.74	
	Waist Slab	2	2.25	1.50	0.15	1.01	
	Counter top						
	Ground Floor						
	Counter Top	1	5.09	0.60	0.08	0.23	
	Counter Top	1	4.63	0.60	0.08	0.21	
	First Floor						
	Counter Top	1	5.09	0.60	0.08	0.23	
	First Floor						
	Counter Top	12	1.47	0.55	0.08	0.73	
	Counter Top	12	0.50	1.36	0.08	0.61	
	Counter Top	1	1.47	0.55	0.08	0.06	
	Counter Top	1	1.36	0.50	0.08	0.05	
	Counter Top	13	1.57	0.40	0.08	0.61	
	Counter Top	13	0.54	0.81	0.08	0.42	
	Lintel						
	D1 (900X2400)	52	1.20	0.23	0.20	2.87	
	D2 (750X2100)	26	1.05	0.23	0.20	1.26	
	D5 (900X2400)	54	1.20	0.23	0.20	2.98	
	D4 (1500X2400)	5	1.80	0.23	0.20	0.41	
	D3 (1000X2400)	4	1.30	0.23	0.20	0.24	
	Door (750x2100)	36	1.05	0.23	0.20	1.74	
	GI1(8000x2850)	1	8.30	0.23	0.20	0.38	
						1270.61	**Cum**
2.03	**Supplying, fitting and fixing in position reinforcement bars upto 1st floor level, conforming to relevant I.S. Code for R.C.C. work/ R.B. walling including straightening, cleaning, cutting and bending to proper shapes and length as per details, supplying and binding with 20G annealed black wire and placing in position with proper blocks, supports, chairs, spacers etc. complete. (Rates inclusive of all wastage, lappage, hooks, chairs, anchorage etc. and no measurements for the same is required)**						
	From Primary Sources like TATA/ SAIL/ ESSAR/ JINDAL/ SHYAM/ RINL						
	TMT Corrosion resistant steel (CRS) reinforcement bar						
	Hostel Block						
	Foundation				15112.00	15112.00	
	Grade slab				11068.00	11068.00	
	Column				41292.00	41292.00	
	Shear wall				24334.00	24334.00	
	Beam				62173.00	62173.00	
	Slab				20668.00	20668.00	
	Staircase			100.00	13.11	1311.00	
	Counter top			40.00	3.15	126.00	
	Lintel			60.00	9.88	592.80	
	UG Tank			125.00	46.47	5808.75	
						182485.55	
						1824.86	**Qntl**
2.04	**Extra over item 2.8 (a, b, c) above for each subsequent floor or part thereof above first floor level.**						
	Hostel Block						
	Total steel (Considered 60% for above 1st floor lvl)				106006.08	106006.08	
						106006.08	
						1060.06	**Qntl**

S No.	Item Description	Nos	Length	Width	Height	Quantity	Unit
2.05	**Providing form work of ordinary timber planking of thickness not less than 25mm and removal of the same for concrete members so as to give a rough finish including centering, shuttering, strutting and propping etc., for height of propping and centering of supporting floor to the soffit of the concrete member not exceeding 4.0M as specified for the following items:**						
a)	**Foundation, footings, bases of columns, pile cap, raft and mass concrete works etc.**						
	Hostel Block						
	Foudation	1	274.00			274.00	
	UGT Tank Raft	1	8.50	5.30	0.40	11.04	
						285.04	**Sqm**
b)	**Vertical surface such as walls (any thickness), parapet walls, partitions, walls of septic tank, inspection pit etc. including attached pilasters, buttresses, plinth and string courses and the like.**						
	Hostel Block						
	UGT Tank						
	UGT Tank Wall	3	4.00		4.00	96.00	
	UGT Tank Wall	2	7.60		4.00	121.60	
						217.60	**Sqm**
2.06	**Providing form work of 12mm thick Plywood Board and removal of the same for concrete members so as to give a rough finish including centering, shuttering, strutting and propping etc., for height of propping and centering of supporting floor to the soffit of the concrete member not exceeding 4.0M as specified for the following items:**						
(a)	**Columns, Pillars, Posts & Strut of square/ rectangular/ polygonal in plan or any shape like Tee/L etc. having plane vertical face**						
	Hostel Block						
	Column	1	1041.00			1041.00	
						1041.00	**Sqm**
b)	**Sides and Soffits of Beams, beam haunchings, cantilever girders, bressumers, lintels and horizontal ties.** **For depth exceeding 1.0M**						
	Hostel Block						
	Beam	1	2364.00			2364.00	
	Lintel						
	D1 (900X2400)	52	1.20	0.23	0.20	39.31	
	D2 (750X2100)	26	1.05	0.23	0.20	17.20	
	D5 (900X2400)	54	1.20	0.23	0.20	40.82	
	D4 (1500X2400)	5	1.80	0.23	0.20	5.67	
	D3 (1000X2400)	4	1.30	0.23	0.20	3.28	
	Door (750x2100)	36	1.05	0.23	0.20	23.81	
	Gl1(8000x2850)	1	8.30	0.23	0.20	5.23	
						2499.32	**Sqm**
c)	**Flat Surfaces such as soffits of suspended floors, roofs, landings, cantilever slabs, chajjas, balconies and the like.** **Floors etc. upto 200mm in thickness.**						
	Hostel Block						
	Slab	1	1945.00			1945.00	
	UGT Tank						
	Roof slab	1	7.60	4.40		33.44	
	Staircase						
	Ground Floor to first Floor						
	Landing	1	3.27	1.50		4.91	
	Landing	1	3.00	2.00		6.00	
	First Floor to terrace						
	Landing	1	2.00	1.30		2.60	
	Landing	1	2.60	1.50		3.90	
	Landing (ramp)	1	2.60	1.20		3.12	
	Landing	1	2.60	2.23		5.80	
	Landing	1	2.60	5.59		14.53	
	Landing	1	1.50	1.00		1.50	
	Counter top						

S No.	Item Description	Nos	Length	Width	Height	Quantity	Unit
	Ground Floor						
	Counter Top	1	5.09	0.60	0.08	3.52	
	Counter Top	1	4.63	0.60	0.08	3.22	
	First Floor						
	Counter Top	1	5.09	0.60	0.08	3.52	
	First Floor						
	Counter Top	12	1.47	0.55	0.08	12.02	
	Counter Top	12	0.50	1.36	0.08	11.02	
	Counter Top	1	1.47	0.55	0.08	1.00	
	Counter Top	1	1.36	0.50	0.08	0.85	
	Counter Top	13	1.57	0.40	0.08	10.47	
	Counter Top	13	0.54	0.81	0.08	7.73	
						2074.16	**Sqm**
e)	**Staircase with sloping or stepped soffits including risers and stringers but excluding Landing.**						
	Hostel Block						
	Staircase						
	Ground Floor to first Floor						
	Waist Slab	2	2.25	1.50		6.75	
	Sides	4	2.25		0.15	1.35	
	Waist Slab	2	2.25	3.00		13.50	
	Sides	4	2.25		0.15	1.35	
	First Floor to 2nd floor						
	Waist Slab	2	2.25	1.50		6.75	
	Sides	4	2.25		0.15	1.35	
	Waist Slab	2	2.25	3.00		13.50	
	Sides	4	2.25		0.15	1.35	
	2nd Floor to terrace						
	Waist Slab	2	2.25	1.50		6.75	
	Sides	4	2.25		0.15	1.35	
						54.00	**Sqm**
2.07	**In Columns, pillars, posts, struts, suspended floor, roof, landing, shelf and support, balcony, lintel, sill band, beam, girder, bressumer, cantilever, staircase etc. above plinth level upto 1st floor level. (Without using admixture, plasticiser)**						
	M15 or Prop. 1:2:4 (For Non-structural Works)						
	Windows and Ventilators						
	Hostel Block						
	WC (Door)(750x2100)	36	0.75	0.30	0.05	0.41	
						0.41	**Cum**
3.00	**Chapter – 3 - Flooring Works**						
3.01	**Providing polished granite slab of approved quality, size, shape and thickness not less than 18 mm on floors, skirting, treads and risers of steps over cement mortar bed 15 mm thick in prop. 1:3 (1 cement : 3 coarse sand) including cutting where necessary finished with flush pointing with Fix-A-Tile Choksey/Sika/Pidilite/Rouf) /white cement slurry mixed with approved pigment to match the shade of granite slab, complete at all levels as specified and directed. (Cement plastering to be measured and paid separately). (Coloured pigment should be in conformity with colour of slab and as approved and directed by the Department).**						
	Hostal Block						
	Lower Ground Floor						
	Area of Doms	2	6.27	3.50		43.89	
	Area of Doms	10	6.00	3.50		210.00	
	Area of Doms	1	6.04	3.50		21.14	
	Area of Doms	2	3.56	3.50		24.89	
	Area of Doms	1	2.62	3.50		9.15	
	Ground Floor						
	Area of Doms	2	6.27	3.50		43.89	
	Area of Doms	10	6.00	3.50		210.00	
	Area of Doms	1	6.04	3.50		21.14	
	Area of Doms	2	3.54	3.50		24.78	
	Area of Doms	1	2.62	3.50		9.15	
	First Floor						
	Area of Guest Rooms	12	13.24			158.93	
	Area of Guest Rooms	1	17.29			17.29	

S No.	Item Description	Nos	Length	Width	Height	Quantity	Unit
	Area of Guest Rooms	13	13.80			179.37	
	Add 15% extra for skirting					146.04	
						1119.67	**Sqm**
3.02	**Kota-stone slab flooring of 18 mm thick over 20mm thick base of cement plaster 1:6 (1 cement : 6 coarse sand) laid over and jointed with grey cement slurry mixed with pigment to match the shade of the slab including rubbing and polishing complete.**						
	Slab above 0.4sq.m. size						
	Hostal Block						
	UGT Tank						
	Area of Pump Room	1	4.00	4.00		16.00	
	Terrace Floor						
	Area of Terrace	1	774.03			774.03	
	Less Cutout	-1	43.49			-43.49	
	Less Cutout	-1	33.86			-33.86	
	Area of Mumty (Terrace)	1	4.75	3.27		15.52	
						728.20	**Sqm**
3.03	**Kota stone slab of 18 mm thick in riser of steps, skirting, dado and pillars laid with 10mm thick cement plaster 1:3 (1 cement : 3 coarse sand) and jointed with grey cement slurry mixed with pigment to match the shade of the slabs including rubbing and polishing complete.**						
	Slab above 0.4sq.m. size						
	Add 15% extra for skirting	15%	728.20			109.23	
						109.23	**Sqm**

S No.	Item Description	Nos	Length	Width	Height	Quantity	Unit
3.04	**Providing VITRIFIED floor tiles of Somany/ Orient/ Nitco/ Qutone make or equivalent of approved quality of specified size, shape and thickness not less than 18mm on floors, skirting, risers and treads of steps over 15 mm thick base of cement mortar in prop. 1:3 (1 cement : 3 coarse sand) including cutting where necessary finished with flush pointing with Fix-A-Tile (Choksey/Sika/Pidilite/Rouf) / white cement slurry mixed with approved pigment to match shade of tiles, mixed with approved pigment to match the shade of the tiles, complete at all levels as specified and directed. (Cement plastering to be measured and paid separately). (Coloured pigment should be in conformity with colour of tiles and as approved and directed by the Department)**						
	Premium range						
	Hostal Block						
	Lower Ground Floor						
	Area of Toilet	1	35.51			35.51	
	Area of WC	12	1.50	1.00		18.00	
	Area of Toilet	1	17.84			17.84	
	Area of WC	12	1.50	1.00		18.00	
	Ground Floor						
	Area of Toilet	1	35.51			35.51	
	Area of WC	12	1.50	1.00		18.00	
	First Floor						
	Area of Toilet	12	2.23	1.53		40.72	
	Area of Toilet	1	3.37	1.53		5.14	
	Area of Toilet	13	1.80	1.59		37.09	
						225.80	**Sqm**
3.05	**Providing polished VITRIFIED wall tiles of Somany/ Orient/ Nitco/ Qutone make or equivalent of approved quality, size, shape and thickness not less than 8mm on walls and skirting over cement mortar bed 10 mm thick in prop. 1:3 (1 cement : 3 coarse sand) including cutting where necessary finished with flush pointing with Fix-A-Tile (Choksey / Sika / Pidilite / Rouf) or white cement slurry mixed with approved pigment to match shade of tiles complete at all levels as specified and directed. (Cement plastering to be measured and paid separately).**						
	Premium range						
	Hostal Block						
	Lower Ground Floor						
	Area of Toilet	1	36.66		2.40	87.99	
	Less Door	-12	0.75		2.10	-18.90	
	Less D3	-1	1.00		2.40	-2.40	
	Area of WC	12	60.00		2.40	1728.00	
	Less Door	-12	0.75		2.10	-18.90	
	Area of Toilet	1	25.26		2.40	60.63	
	Less Door	-12	0.75		2.10	-18.90	
	Less D3	-1	1.00		2.40	-2.40	
	Area of WC	12	60.00		2.40	1728.00	
	Less Door	-12	0.75		2.10	-18.90	
	Ground Floor						
	Area of Toilet	1	36.66		2.40	87.99	
	Less Door	-12	0.75		2.10	-18.90	
	Less D3	-1	1.00		2.40	-2.40	
	Area of WC	12	60.00		2.40	1728.00	
	Less Door	-12	0.75		2.10	-18.90	
	First Floor						
	Area of Toilet	12	90.00		2.40	2592.00	
	Less D2	-12	0.80		2.10	-20.16	
	Area of Toilet	1	9.79		2.40	23.50	
	Less D2	-1	0.80		2.10	-1.68	
	Area of Toilet	13	88.01		2.40	2745.91	
	Less D2	-13	0.80		2.10	-21.84	
						10617.74	**Sqm**

S No.	Item Description	Nos	Length	Width	Height	Quantity	Unit
3.06	**Providing and laying flamed finish Granite stone flooring in required design and patterns, in linear as well as curvilinear portions of the building all complete as per the architectural drawings with 18 mm thick stone slab over 20 mm (average) thick base of cement mortar 1:4 (1 cement : 4 coarse sand) laid and jointed with cement slurry and pointing with white cement slurry admixed with pigment of matching shade including rubbing, curing and polishing etc. all complete as specified and as directed by the Engineer-in-Charge :**						
	Flamed finish granite stone slab Jet Black, Cherry Red, Elite Brown, Cat Eye or equivalent.						
	Hostal Block						
	Lower Ground Floor						
	Area of Common room	1	8.77	4.72		41.35	
	Area of Balcony	8	2.20	1.70		29.92	
	Area of Corridor	1	379.21			379.21	
	Less Cutout	-1	18.37	3.23		-59.34	
	Less Cutout	-1	7.95	3.23		-25.66	
	Area of Ramp	2	16.76	1.44		48.25	
	Landing (Ramp)	1	3.00	1.50		4.50	
	Area of staircase	1	7.95	3.00		23.84	
	Landing	1	3.00	2.00		6.00	
	Tread	20	3.00	0.30		18.00	
	Area of staircase	1	4.75	3.27		15.52	
	Landing	1	3.27	1.50		4.91	
	Tread	20	1.50	0.30		9.00	
	Ground Floor						
	Area of Common Room	1	8.77	4.72		41.35	
	Area of Balcony	15	2.20	1.70		56.10	
	Landing	1	3.27	1.50		4.91	
	Tread	20	1.50	0.30		9.00	
	Tread	20	3.00	0.30		18.00	
	Landing	1	3.00	2.00		6.00	
	Landing	1	8.80			8.80	
	Area of Corridor	1	353.59			353.59	
	Less Cutout	-1	18.37	3.23		-59.34	
	Less Cutout	-1	33.86			-33.86	
	Area of Corridor (Entrance)	1	8.19	8.00		65.48	
	Area of Ramp	2	16.76	1.44		48.25	
	Landing (Ramp)	1	3.00	1.50		4.50	
	First Floor						
	Area of Common room	1	5.63	4.72		26.52	
	Landing	1	3.27	1.50		4.91	
	Tread	20	1.50	0.30		9.00	
	Area of Corridor	1	353.59			353.59	
	Less Cutout	-1	43.49			-43.49	
	Less Cutout	-1	33.86			-33.86	
	Area of Balcony	26	1.70	1.60		70.72	
	Terrace						
	Landing	1	3.27	1.50		4.91	
						1410.57	**Sqm**
3.07	**Providing and fixing 18 mm thick gang saw cut, mirror polished, premoulded and prepolished, machine cut for kitchen platforms, vanity counters, window sills, facias and similar locations of required size, approved shade, colour and texture laid over 20 mm thick base cement mortar 1:4 (1 cement : 4 coarse sand), joints treated with white cement, mixed with matching pigment, epoxy touch ups, including rubbing, curing, moulding and polishing to edges to give high gloss finish etc. complete at all levels.**						
	Granite of any colour and shade						
	Area of slab over 0.50 sqm						
	Hostal Block						
	Lower Ground Floor						
	Counter Top (Toilet)	1	5.09	0.60		3.05	
	Counter Top (Toilet)	1	4.63	0.60		2.78	
	Ground Floor						
	Counter Top (Toilet)	1	5.09	0.60		3.05	

S No.	Item Description	Nos	Length	Width	Height	Quantity	Unit
	First Floor						
	Counter Top (Toilet)	12	1.47	0.55		9.70	
	Counter Top (Toilet)	12	0.50	1.36		8.13	
	Counter Top (Toilet)	1	1.47	0.55		0.81	
	Counter Top (Toilet)	1	1.36	0.50		0.68	
	Counter Top (Toilet)	13	1.57	0.40		8.16	
	Counter Top (Toilet)	13	0.54	0.81		5.63	
						42.00	**Sqm**
3.08	**Extra for providing opening of required size & shape for wash basin/kitchen sink in kitchen platform, vanity counter and similar location in marble/ Granite/ stone work, including necessary holes for pillar taps etc. including moulding, rubbing and polishing of cut edges etc. complete**						
	Hostal Block						
	Lower Ground Floor						
	Counter Top (Toilet)	1	5.09	0.60		5.69	
	Counter Top (Toilet)	1	4.63	0.60		5.23	
	Ground Floor						
	Counter Top (Toilet)	1	5.09	0.60		5.69	
	First Floor						
	Counter Top (Toilet)	12	1.47	0.55		24.24	
	Counter Top (Toilet)	12	0.50	1.36		22.26	
	Counter Top (Toilet)	1	1.47	0.55		2.02	
	Counter Top (Toilet)	1	1.36	0.50		1.86	
	Counter Top (Toilet)	13	1.57	0.40		25.61	
	Counter Top (Toilet)	13	0.54	0.81		17.49	
						110.07	**m**
3.09	**Extra for providing opening of required size & shape for wash basin/kitchen sink in kitchen platform, vanity counter and similar location in marble/ Granite/ stone work, including necessary holes for pillar taps etc. including moulding, rubbing and polishing of cut edges etc. complete.**						
	Hostel Block	1	44.00			44.00	
						44.00	**Nos.**
3.10	**Providing and fixing stone slab with table rubbed, edges rounded and polished, of size 75x50 cm deep and 1.8 cm thick, fixed in urinal partitions by cutting a chase of appropriate width with chase cutter and embedding the stone in the chase with epoxy grout or with cement concrete 1:2:4 (1 cement : 2 coarse sand : 4 graded stone aggregate 6 mm nominal size) as per direction of Engineer-in-charge and finished smooth.**						
	Granite Stone of approved shade						
	Hostal Block						
	Lower Ground Floor						
	Urinal Partition	4	0.75		1.20	3.60	
	Ground Floor						
	Urinal Partition	4	0.75		1.20	3.60	
						7.20	**Sqm**
3.11	**Granite stone slab 18 mm thick in risers of steps, skirting, dado and pillars laid on 12 mm (average) thick cement mortar 1:3 (1 cement : 3 coarse sand) and jointed with grey cement slurry mixed with pigment to match the shade of the slab, including rubbing and polishing complete.**						
	Considered 15% extra for skirting	15%	1424.92			213.74	
	Hostal Block						
	Lower Ground Floor						
	Riser	22	3.00		0.15	9.90	
	Riser	22	1.50		0.15	4.95	
	Ground Floor						
	Riser	22	1.50		0.15	4.95	
	Riser	22	3.00		0.15	9.90	
	First Floor						
	Riser	22	1.50		0.15	4.95	
						248.39	**Sqm**

S No.	Item Description	Nos	Length	Width	Height	Quantity	Unit
3.12	**Providing Ceramic Tiles of Somany/ Orient/ Nitco/ Qutone make or equivalent of approved quality, size, shape and thickness not less than 8 mm on floors, skirting, treads and risers of steps over cement mortar bed 15 mm thick in prop. 1:3 (1 cement : 3 coarse sand) including cutting where necessary finished with flush pointing with fix-A Tile Choksey/ Sika/ Pidilite/ Rouf/ White cement slurry mixed with approved pigment to match the shade of tiles, complete at all levels as specified and directed (cement plastering to be measured and paid separately).**						
	Normal range (sizes 300mmx300mm and above)						
(a)	**Premium Range**						
	Hostel Block						
	Area of Domestic Tank	1	4.00	3.00		12.00	
						12.00	**Sqm**
3.13	**Providing polished ceramic wall tiles of Somany/ Orient/ Nitco/ Qutone make or equivalent of approved quality, size, shape and thickness not less than 8mm on walls and skirting over cement mortar bed 10 mm thick in prop. 1:3 (1 cement : 3 coarse sand) including cutting where necessary finished with flush pointing with Fix-A-Tile (Choksey / Sika / Pidilite / Rouf) or white cement slurry mixed with approved pigment to match shade of tiles complete at all levels as specified and directed. (Cement plastering to be measured and paid separately).**						
	Executive range- 1 (Sizes 200 mm x 300mm and above)						
(a)	**Premium Range**						
	Hostel Block						
	Area of Domestic Tank	1	4.00	3.00	4.00	56.00	
						56.00	**Sqm**
4.00	**Chapter – 4 - Masonry Works**						
4.01	**Autoclave Aerated Concrete Block work using AAC block conforming to IS-2185 (Part-III) in cement mortar in prop 1:5 (1 cement: 5 sand) including racking out joints and curing complete as per specification and as directed.**						
	In Sub-structure upto plinth level including dewatering if necessary						
	AAC Blocks of size 600mm x 200mm x 150mm						
	Hoste block						
	Tread (Entrance)	1	8.00	0.90	0.15	2.40	
	Tread (Entrance)	1	8.00	0.60	0.15	2.40	
	Tread (Entrance)	1	8.00	0.30	0.15	2.40	
						7.20	**Cum**
4.02	**In superstructure above plinth level up to 1st floor level.**						
	AAC Blocks of size 600mm x 200mm						
	Hostel Block						
	Lower Ground Floor						
	Outer wall of Toilet	1	11.61	0.23	3.15	8.41	
	Outer wall of Toilet	1	8.12	0.23	3.15	5.88	
	Ground Floor						
	Entrance Stap	1	8.00	1.35	0.15	1.62	
	Entrance Stap	1	8.00	0.90	0.15	1.08	
	Entrance Stap	1	8.00	0.45	0.15	0.54	
	Outer wall of Toilet	1	11.61	0.23	3.15	8.41	
	Wall	2	9.80	0.23	3.55	16.00	
	Wall	2	6.80	0.23	3.55	11.10	
	Wall	4	12.50	0.23	3.55	40.83	
	Steps						
	Lower Ground Floor						
	Tread	20	3.00	0.30	0.15	1.35	
	Tread	20	1.50	0.30	0.15	0.68	
	Ground Floor						
	Tread	20	3.00	0.30	0.15	1.35	
	Tread	20	1.50	0.30	0.15	0.68	

S No.	Item Description	Nos	Length	Width	Height	Quantity	Unit
	First Floor						
	Tread	20	1.50	0.30	0.15	0.68	
						98.60	**Cum**
4.03	**Extra over item no. 4.16 above for AAC Block work in each subsequent floor or part thereof above 1st floor level.**						
	Above 1st Floor level						
	Hostel Block	1	0.68			0.68	
						0.68	**Cum**
4.04	**125mm thick wall using Autoclave Aerated Concrete Block (AAC block) conforming to IS-2185 (Part-III) in cement mortar in prop 1:5 (1 cement : 5 sand) including racking out joints and curing complete as per specification and as directed in super structure above plinth up to 1st floor level (protruding rod is to be provided at every 3 course interval and will be measured and paid separately).**						
	Hostel Block						
	Lower Ground Floor						
	Wall Between of Corridor & Toilet	1	11.39		3.15	35.86	
	Less D3	-1	1.00		2.40	-2.40	
	Wall Between of Rooms & Toilet	2	4.75		3.15	29.89	
	Wall Between of Corridor & Toilet	12	1.50		3.15	56.70	
	Wall Between of Corridor & Toilet	12	1.05		3.15	39.69	
	Less Door	-12	0.75		2.10	-18.90	
	Wall Between of Corridor & Toilet	1	8.12		3.15	25.56	
	Less D3	-1	1.00		2.40	-2.40	
	Wall Between of Rooms & Toilet	2	4.63		3.15	29.17	
	Wall Between of Corridor & Toilet	12	1.50		3.15	56.70	
	Wall Between of Corridor & Toilet	12	1.05		3.15	39.69	
	Less Door	-12	0.75		2.10	-18.90	
	Ground Floor						
	Wall Between of Corridor & Toilet	1	11.39		3.15	35.86	
	Less D3	-1	1.00		2.40	-2.40	
	Wall Between of Rooms & Toilet	2	4.75		3.15	29.89	
	Wall Between of Toilet & Toilet	1	1.20		3.15	3.78	
	Wall Between of Corridor & Toilet	12	1.50		3.15	56.70	
	Wall Between of Corridor & Toilet	12	1.05		3.15	39.69	
	Less Door	-12	0.75		2.10	-18.90	
	First Floor						
	Wall Between of Room & Toilet	12	2.49		3.15	93.93	
	Wall Between of Room & Toilet	12	2.37		3.15	89.59	
	Less D2	-12	0.80		2.10	-20.16	
	Wall Between of Room & Toilet	12	1.53		3.15	57.65	
	Outer wall of Room	1	4.62		3.15	14.54	
	Less D1	-1	0.90		2.40	-2.16	
	Wall Between of Room & Toilet	2	3.37		3.15	21.23	
	Less Door	-1	0.90		2.10	-1.89	
	Wall Between of Room & Toilet	2	1.64		3.15	10.33	
	Wall Between of Room & Toilet	13	1.59		3.15	64.91	
	Less Door	-13	0.90		2.10	-24.57	
	Wall Between of Room & Toilet	13	1.92		3.15	78.42	
	Wall Between of Room & Toilet	13	2.03		3.15	83.13	
						880.23	**Sqm**
4.05	**Extra for AAC Block walling for each subsequent floor or part thereof above the 1st floor level over Item No. 4.17, 4.18, 4.19 & 4.20 above.**						
	Above 1st Floor level						
	Hostel Block	1	464.95			464.95	
						464.95	**Sqm**
4.06	**Filling sunken floor with broken brick bats/ Stone aggregates and sand including compacting and supplying of materials complete as specified and directed for all levels**						
	brick bats						
	Toilet Sunken						
	Hostel Block						
	Ground Floor						
	Area of Toilet	1	35.51		0.30	10.65	
	Area of WC	12	1.50	1.00	0.30	5.40	
	Area of Balcony	15	2.20	1.70	0.30	16.83	

S No.	Item Description	Nos	Length	Width	Height	Quantity	Unit
	First Floor						
	Area of Toilet	12	2.23	1.53	0.30	12.22	
	Area of Toilet	1	3.37	1.53	0.30	1.54	
	Area of Toilet	13	1.80	1.59	0.30	11.13	
	Area of Balcony	26	1.70	1.60	0.30	21.22	
						78.98	**Cum**
4.07	**Extra cost for lifting of brickbats/Stone soling and sand for filling of sunk floor for each subsequent floors above the ground floor as directed and specified.**						
	Toilet Sunken						
	Qty same as above					78.98	
						78.98	**Cum**
5.00	**Chapter – 5 - Plastering Works**						
5.01	**10 mm thick Cement plaster in single coat on fair side of brick/concrete walls for interior plastering up to 1st floor level including arises or rounded angles not exceeding 80mm girth and finished even and smooth including curing complete as directed.**						
	In cement mortar 1:6						
	Hostal Block						
	Lower Ground Floor						
	Area of Toilet	1	36.66		3.15	115.48	
	Less Door	-12	0.75		2.10	-18.90	
	Less D3	-1	1.00		2.40	-2.40	
	Area of WC	12	60.00		3.15	2268.00	
	Less Door	-12	0.75		2.10	-18.90	
	Area of Toilet	1	25.26		3.15	79.57	
	Less Door	-12	0.75		2.10	-18.90	
	Less D3	-1	1.00		2.40	-2.40	
	Area of WC	12	60.00		3.15	2268.00	
	Less Door	-12	0.75		2.10	-18.90	
	Ground Floor						
	Area of Toilet	1	36.66		3.15	115.48	
	Less Door	-12	0.75		2.10	-18.90	
	Less D3	-1	1.00		2.40	-2.40	
	Area of WC	12	60.00		3.15	2268.00	
	Less Door	-12	0.75		2.10	-18.90	
	First Floor						
	Area of Toilet	12	90.00		3.15	3402.00	
	Less D2	-12	0.80		2.10	-20.16	
	Area of Toilet	1	9.79		3.15	30.84	
	Less D2	-1	0.80		2.10	-1.68	
	Area of Toilet	13	88.01		3.15	3604.01	
	Less D2	-13	0.80		2.10	-21.84	
						13987.10	**Sqm**
5.02	**Providing surface preparation for walls, celling etc. using average 2 mm thick plaster of paris including clearing, rubbing with sand paper, filling gaps, depression etc. where necessary, with chalk powder and plaster of paris paste, making the surface even and smooth complete at all levels as specified and directed.**						
	Internal plaster qty	1	13987.10			13987.10	
	Less vitrified wall tile	-1	10617.74			-10617.74	
						3369.36	**Sqm**
5.03	**Wall painting (two coats) with acrylic emulsion paint approved brand and manufacture (Asian paint/ Berger paint/ ICI paint/ J & N paint/ Nerolac) on new surface to give an even shade after thoroughly brushing the surfaces free from mortar droppings and other foreign matter and sand papered smooth.**						
	Qty same as putty	1	3369.36			3369.36	
						3369.36	**Sqm**
5.04	**Extra over item no 15.40 above for every subsequent coat of wall painting with acrylic emulsion paint of approved brand and manufacture (Asian paint/ Berger paint/ ICI paint/ J & N paint/ Nerolac).**						

S No.	Item Description	Nos	Length	Width	Height	Quantity	Unit
	Qty same as acrylic paint	1	3369.36			3369.36	
						3369.36	**Sqm**
5.05	**Melamine polishing on wood work (one or more coat).**						
	Qty same as Veneer	1	306.54			306.54	
						306.54	**Sqm**
6.00	**Chapter – 6 - Ceiling, Wall Lining and Partition Works**						
6.01	**Providing and fixing tiled false ceiling of specified materials of size 595x595 mm in true horizontal level, suspended on inter locking metal grid of hot dipped galvanized steel sections (galvanized @ 120 grams/ sqm, both side inclusive) consisting of main "T" runner with suitably spaced joints to get required length and of size 24x38 mm made from 0.30 mm thick (minimum) sheet, spaced at 1200 mm center to center and cross "T" of size 24x25 mm made of 0.30 mm thick (minimum) sheet, 1200 mm long spaced between main "T" at 600 mm center to center to form a grid of 1200x600 mm and secondary cross "T" of length 600 mm and size 24x25 mm made of 0.30 mm thick (minimum) sheet to be interlocked at middle of the 1200x600 mm panel to form grids of 600x600 mm and wall angle of size 24x24x0.3 mm and laying false ceiling tiles of approved texture in the grid**						
	including, required cutting/making, opening for services like diffusers, grills, light fittings, fixtures, smoke detectors etc. Main"T" runners to be suspended from ceiling using GI slotted cleats of size 27 x 37 x 25 x1.6 mm fixed to ceiling with 12.5 mm dia and 50 mm long dash fasteners, 4 mm GI adjustable rods with galvanised butterfly level clips of size 85 x 30 x 0.8 mm spaced at 1200 mm center to center along main T, bottom exposed width of 24 mm of all T-sections shall be pre-painted with polyester paint, all complete for all heights as per specifications, drawings and as directed by Engineer-in-charge.						
	GI Metal Ceiling Lay in plain Tegular edge Global white color tiles of size 595x595 mm, and 0.5 mm thick with 8 mm drop; made of G I sheet having galvanizing of 100 gms/sqm (both sides inclusive) and electro statically polyester powder coated of thickness 60 microns (minimum), including factory painted after bending.						
	Hostal Block						
	Lower Ground Floor						
	Area of Toilet	1	35.508			35.508	
	Area of WC	12	1.500	1.000		18.000	
	Area of Toilet	1	17.836			17.836	
	Area of WC	12	1.500	1.000		18.000	
	Ground Floor						
	Area of Toilet	1	35.508			35.508	
	Area of WC	12	1.500	1.000		18.000	
	First Floor						
	Area of Toilet	12	2.225	1.525		40.718	
	Area of Toilet	1	3.370	1.525		5.139	
	Area of Toilet	13	1.800	1.585		37.089	
						225.80	**Sqm**
7.00	**Chapter – 7 - Roofing Works**						
7.01	**Providing thatch roofing with sun grass (Ullo) in layer of 75 mm thick with half spilt bamboo fillet and tying with galvd. wire complete as directed.**						
	150 mm thick.						
	Hostel Block						
	Roof area	1	2123.64			2123.64	
	Add 20% extra for slopping					424.73	
						2548.37	**Sqm**

S No.	Item Description	Nos	Length	Width	Height	Quantity	Unit
7.02	**Providing and laying thatching, capping to ridge and hip with new sun grass of 75 mm thick (fine work) stiffened with bamboo slips of size 30mm x 6mm and tied with galvd. tying wire complete as directed.**						
	Hostel Block						
		1	272.57			272.57	
						272.57	**m**
8.00	**Chapter – 8 - Wood Work**						
8.01	**Providing wood work in frame (chowkats) of doors, windows, clerestory windows and other similar works wrought, framed and fixed in position in contact with C.C or brick masonry wall including supplying, fitting and fixing with M.S. hold fast (40mmx3mmx250mm) as per design embedded in cement concrete block in proportion 1:2:4 and with two coats of kiricide oiling to the timber faces in contact with C.C and masonry as directed and specified.**						
	With Sal wood						
	Hostel Block						
	D1 (900X2400)	52	0.90		2.40	296.40	
	D2 (750X2100)	26	0.75		2.10	128.70	
	D3 (1000X2400)	4	1.00		2.40	23.20	
	D4 (1500X2400)	5	1.50		2.40	31.50	
	D5 (900X2400)	54	0.90		2.40	307.80	
						787.60	
	Considered 65x125mm section					**6.40**	**Cum**
8.02	**Providing and fixing flush door shutters solid core construction with frame of 1st class hard wood with cross band and face veneered ply wood face panels conforming to relevant I.S code including oxidised iron butt hinges (100mm x 75mm x 3.5mm) with necessary wood screws.**						
	Non-decorative type face panels and block board core 35 mm thick						
	Hostel Block						
	D1 (900X2400)	52	0.90		2.40	112.32	
	D2 (750X2100)	26	0.75		2.10	40.95	
	D3 (1000X2400)	4	1.00		2.40	9.60	
	D4 (1500X2400)	5	1.50		2.40	18.00	
	D5 (900X2400)	54	0.90		2.40	116.64	
						297.51	**Sqm**
8.03	**Providing 1st Class Local timber (Pooma/ Hollock/ Oak/ Gamari/ Diengrai and the like) ventilating louvre in 50mm x 38mm size wooden frame with 150mm x 20mm slate made of 1st class local wood including fitting and fixing with nails and painting with two coats of kiricide oiling complete**						
	Hostel Block						
	LGF						
		8	6.00		3.00	144.00	
	GF						
		15	6.00		3.00	270.00	
	FF						
		26	6.00		3.00	468.00	
						882.00	**Sqm**
8.04	**Extra for providing lipping with 2nd class teak wood battens 25 mm minimum depth on all edges of flush door shutters (over all area of door shutter to be measured).**						
	Flush Door Quantity	1	297.51			297.51	
						297.51	**Sqm**
8.05	**Providing & Fixing decorative high pressure laminated sheet of plain / wood grain in gloss / matt/ suede finish with high density protective surface layer and reverse side of adhesive bonding quality conforming to IS : 2046 Type S, including cost of adhesive of approved quality.**						
	1.5 mm thick						
	Flush Door Quantity	2	144.24			288.48	

S No.	Item Description	Nos	Length	Width	Height	Quantity	Unit
						288.48	**Sqm**
8.06	**Providing and fixing 4mm thick coir veneer board, ISI marked IS : 14842, plain lining with necessary screws, priming coat on unexposed surface etc., complete**						
	Flush Door Quantity	2	153.27			306.54	
						306.54	**Sqm**
9.00	**Chapter – 9 - Aluminium Work**						
9.01	**Providing and fixing 12 mm thick frameless toughened glass door shutter of approved brand and manufacture, including providing and fixing top & bottom pivot & double action hydraulic floor spring type fixing arrangement and making necessary holes etc. for fixing required door fittings, all complete as per direction of Engineer-incharge (Door handle, lock and stopper etc.to be paid separately).**						
	Hostel Block						
	Door (2000x2400)	1	2.00		2.40	4.80	
						4.80	**Sqm**
9.02	**Providing and fixing aluminium tubular handle bar 32 mm outer dia, 3.0 mm thick & 2100 mm long with SS screws etc .complete as per direction of Engineer-in-Charge.**						
	Powder coated minimum thickness 50 micron aluminium tubular handle bar						
	Hostel Block						
	Door (2000x2400)	1	4.00			4.00	
						4.00	**Nos**
9.03	**Steel work welded in built up sections/ framed work, including cutting, hoisting, fixing in position and applying a priming coat of approved steel primer using structural steel etc. as required.**						
	In gratings, frames, guard bar, ladder, railings, brackets, gates and similar works						
	Hostal Block						
	Lower Ground Floor						
	Waist Slab	4	2.25			9.00	
	Waist Slab	4	2.25			9.00	
	Ramp Railing	2	18.37			36.74	
	Ramp Railing	2	16.75			33.50	
	Ramp Railing	1	3.00			3.00	
	Ground Floor						
	Waist Slab	4	2.25			9.00	
	Waist Slab	4	2.25			9.00	
	Ramp Railing	2	18.37			36.74	
	Ramp Railing	1	3.00			3.00	
	Ramp Railing	2	16.75			33.50	
	First Floor						
	Waist Slab	4	4.50			18.00	
	12 Kg per m					2405.76	
						2405.76	**Kg**
10.00	**Chapter – 12 - Door and Window Fittings**						
10.01	**Supplying, fitting, fixing Stainless Steel fittings of approved make, reasonably smooth, free from sharp edges and corners, flaws and other defects and with counter sunk holes for screws including necessary C.P. brass screws etc. complete. (bright natural matt & satin finished)**						
a)	**Sliding Door Bolt**						
	250x16 mm						
	Hostel Block						
	D1 (900X2400)	52	2.00			104.00	
	D2 (750X2100)	26	2.00			52.00	
	D3 (1000X2400)	4	2.00			8.00	
	D4 (1500X2400)	5	2.00			10.00	
	D5 (900X2400)	54	2.00			108.00	
						282.00	**Nos**
b)	**Tower Bolt**						
i)	**250x10 mm**						
	Hostel Block						

S No.	Item Description	Nos	Length	Width	Height	Quantity	Unit
	D1 (900X2400)	52	1.00			52.00	
	D3 (1000X2400)	4	2.00			8.00	
	D4 (1500X2400)	5	2.00			10.00	
	D5 (900X2400)	54	2.00			108.00	
						178.00	**Nos**
c)	**Door Handle**						
	150mm						
	Hostel Block						
	D1 (900X2400)	52	2.00			104.00	
	D2 (750X2100)	26	2.00			52.00	
	D3 (1000X2400)	4	2.00			8.00	
	D4 (1500X2400)	5	4.00			20.00	
	D5 (900X2400)	54	2.00			108.00	
						292.00	**Nos**
d)	**Butt hinge**						
	125mm x 50mm x 2.5mm						
	Hostel Block						
	D1 (900X2400)	52	8.00			416.00	
	D2 (750X2100)	26	6.00			156.00	
	D3 (1000X2400)	4	8.00			32.00	
	D4 (1500X2400)	5	8.00			40.00	
	D5 (900X2400)	54	8.00			432.00	
						1076.00	**Nos**
10.02	**Supplying, fitting, fixing brass fittings of approved make, reasonably smooth, free from sharp edges and corners, flaws and other defects and with counter sunk holes for screws including necessary C.P. brass screws etc. complete. (bright natural matt & satin finished)**						
	Mortice Locks cylindrical type (Godrej make polished brass)						
	Chapter – 19 - Plinth Protection and Drains						
	Hostel Block						
	D1 (900X2400)	52	1.00			52.00	
	D3 (1000X2400)	4	1.00			4.00	
	D4 (1500X2400)	5	1.00			5.00	
	D5 (900X2400)	54	1.00			54.00	
						115.00	**Nos**
10.03	**Providing, fitting and fixing Heavy duty Door Closer (Godrej make) of size 180mm x 65mm x 64mm complete as specified and directed by the department**						
	Hostel Block						
	D1 (900X2400)	52	1.00			52.00	
	D3 (1000X2400)	4	1.00			4.00	
	D4 (1500X2400)	5	2.00			10.00	
	D5 (900X2400)	54	1.00			54.00	
						120.00	**Nos**
11.00	**Chapter – 19 - Plinth Protection and Drains**						
11.01	**Plinth Protection by providing 50mm thick Cement Concrete base in prop 1:3:6 (1 cement:3 coarse sand : 6 coarse agg. of 20mm nominal size) with a layer of 10mm thick cement plaster in prop 1:3 and finishing with a floating coat of neat cement including necessary levelling and preparing the subgrade complete as directed**						
	Building perimeter (Hostel block)	1	204.48	1.00		204.48	
						204.48	**Sqm**
12.00	**Chapter – 22 - Water Proofing and Roof Treatment**						
12.01	**Providing and laying integral cement based treatment for water proofing on horizontal surface at all depth below ground level for under ground structures as directed by Engineer-in-Charge and consisting of :**						

S No.	Item Description	Nos	Length	Width	Height	Quantity	Unit
	(i) Ist layer of 22 mm to 25 mm thick approved and specified rough stone slab over a 25 mm thick base of cement mortar 1:3 (1 cement : 3 coarse sand) mixed with water proofing compound conforming to IS:2645 in the recommended proportion over the leveling course (leveling course to be paid separately). Joints sealed and grouted with cement slurry mixed with water proofing compound.						
	(ii) 2nd layer of 25 mm thick cement mortar 1:3 (1 cement: 3 coarse sand) mixed with water proofing compound in recommended proportions. (iii) Finishing top with stone aggregate of 10 mm to 12 mm nominal size spreading @ 8 cudm/sqm thoroughly embedded in the 2nd layer.						
	Using rough kota stone.						
	Hostel Block						
	Raft	1	8.50	5.30		45.05	
	Raft top surface	1	8.50	5.30	0.45	12.42	
	Raft	1	1158.90			1158.90	
	Raft top surface	1	211.65			211.65	
						1428.02	**Sqm**
12.02	**Providing and laying integral cement based treatment for water proofing on the vertical surface by fixing specified stone slab 22 mm to 25 mm thick with cement slurry mixed with water proofing compound conforming to IS:2645 in recommended proportions with a gap of 20 mm (minimum) between stone slabs and the receiving surfaces and filling the gaps with neat cement slurry mixed with water proofing compound and finishing the exterior of stone slab with cement mortar 1:3 (1 cement : 3 coarse sand) 20 mm thick with neat cement punning mixed with water proofing compound in recommended proportion complete at all levels and as directed by Engineer-in-charge :**						
	Using rough kota stone.						
	Hostel Block						
	Tank	1	7.60	4.40	4.00	96.00	
	Raft sides	1	8.50	5.30	0.40	11.04	
	Raft perimeter	1	204.48		0.70	143.14	
	Wall perimeter	1	140.86		3.15	443.71	
						693.89	**Sqm**
12.03	**Providing and applying of swellable type water stop tape, 19mm x 25mm thick in linear meter (expansive nature) for construction joints treatment of RCC structure such as raft slab, retaining walls, water storage tank and at the junctions of raft slab with the retaining walls etc.. After cleaning the surface, one coat of required primer for swellable water stop tape shall be applied throughout the length of the joint @3.78 litre per 240 running meter. Over the primed surface swellable type water stop tape shall be placed. The work shall be carried out all complete as per specification and the direction of the Engineer-In-Charge. The product performance shall carry guarantee for 10 years against any leakage.**						
	Basement						
	Hostel Block						
	Tank	3	7.60	4.40		72.00	
	Wall corner	4	4.00			16.00	
	RCC Wall	3	140.86			422.58	
	Corner	6	3.15			18.90	
						529.48	**m**
12.04	**Providing and laying water proofing treatment to vertical and horizontal surfaces of depressed portions of W.C., kitchen and the like consisting of:**						

S No.	Item Description	Nos	Length	Width	Height	Quantity	Unit
	(i) Ist course of applying cement slurry @ 4.4 kg/sqm mixed with water proofing compound conforming to IS 2645 in recommended proportions including rounding off junction of vertical and horizontal surface.						
	(ii) IInd course of 20 mm cement plaster 1:3 (1 cement : 3 coarse sand) mixed with water proofing compound in recommended proportion including rounding off junction of vertical and horizontal surface.						
	(iii) IIIrd course of applying blown or residual bitumen applied hot at 1.7 kg. per sqm of area.						
	(iv) IVth course of 400 micron thick PVC sheet. (Overlaps at joints of PVC sheet should be 100 mm wide and pasted to each other with bitumen @ 1.7 kg/sqm).						
	Acadmic block						
	Hostal Block						
	Ground Floor						
	Area of Toilet	1	35.508			35.508	
	Area of WC	12	1.500	1.000		18.000	
	Area of Balcony	15	2.200	1.700		56.100	
	First Floor						
	Area of Toilet	12	2.225	1.525		40.718	
	Area of Toilet	1	3.370	1.525		5.139	
	Area of Toilet	13	1.800	1.585		37.089	
	Area of Balcony	26	1.700	1.600		70.720	
	Add 25% extra for sides					263.27	
						526.55	**Sqm**
13.00	**Chapter – 24 - Anti-Termite Treatment Works**						
13.01	**Pre-construction anti - termite treatment at the bottom of foundation pits and walls on either side up to a height of 300mm from bottom of the excavation made for column plinth beam, wall, trenches etc. by applying the emulsion @ 5 (five) litres per square meter of the surface area before starting construction work (supplying of necessary tools and accessories by the contractor) as per the direction of the Department complete.**						
	With aqueous emulsion having concentration 1:499 with Premise 350 SC (Imidachloprid 30.5% SC) and water, i.e. 0.07% in water.						
	Hostel Block						
	Under floors at plinth level	1	964.84			964.84	
						964.84	**Sqm**
13.02	**Pre-construction anti - termite treatment in the back fill in immediate contact with the foundation structure after completion, column, wall etc. to a depth of 450mm and width 300mm (when required refill in 200mm thick layers) applying the emulsion @ 5 (five) litres per square meter towards the concrete and masonry walls so as to ensure earth in contact with the structure well treated - with chemical (supplying of necessary tools and accessories by the contractor) as per the direction of the Department complete.**						
	With aqueous emulsion having concentration 1:499 with Premise 350 SC (Imidachloprid 30.5% SC) and water, i.e. 0.07% in water.						
	Qty same as above	1	964.84			964.84	
						964.84	**Sqm**

S No.	Item Description	Nos	Length	Width	Height	Quantity	Unit
13.03	**Pre-construction anti-termite treatment by applying in the entire levelled area after plinth filling and before laying floor by applying the emulsion @ 5 (five) litres per square meter of the surface to be spread with light rodding so as to ensure proper absorption by the filled up earth (supplying of necessary tools and accessories by the contractor) as per the direction of the Department complete.**						
	With aqueous emulsion having concentration 1:499 with Premise 350 SC (Imidachloprid 30.5% SC) and water, i.e. 0.07% in water						
	Qty same as above	1	964.84			964.84	
						964.84	**Sqm**
14.00	**Market Rate Items**						
14.01	**Providing and fixing STURCTURAL GLAZING to fixed panels with no aluminium section exposed to outside and only glass panels with silicon joint visible from outside. The system specially designed with aluminium section of grade 63400 WP IS:733 and IS 1285 pure polyester powder coated in approved shade and colour with mullion fixed to beams/columns through adequately designed MS painted anchor brackets and expansion fasteners as required. The design to be as per BIS code for required wind pressure IS:875 part III and use of aluminium section alloy as per IS:8147. System design to strictly consider for thermal movement, air infiltration, water penetration, seismic movement and structural movement. Silicon sealant structural grade and weathering grade shall be "Dow corning – USA" or "GE Silicon – USA" or "WACKER – Germany" as per the design requirement**						
b)	**Providng and fixing st. glazing using 24 mm thick DGU soft coated glass**						
	Hostel Block						
	Gl1(8000x2850)	1	8.00		2.85	22.80	
	Less Door	-1	2.00		2.40	-4.80	
						18.00	**Sqm**

ABSTRACT OF COST

Name of work: Proposed External Development - Phase 1 of Tribal Research Institute

S. No.	ITEM OF CIVIL WORK	AMOUNT		
1.00	**Chapter – 1 - Earth Work**	Rs.		/-
2.00	**Chapter – 2 - Cement Concrete Works**	Rs.		/-
3.00	**Chapter – 3 - Flooring Works**	Rs.		/-
4.00	**Chapter – 4 - Masonry Works**	Rs.		/-
5.00	**Chapter – 5 - Plastering Works**	Rs.		/-
6.00	**Chapter – 6 - Ceiling, Wall Lining and Partition Works**	Rs.		/-
7.00	**Chapter – 9 - Aluminium Work**	Rs.		/-
8.00	**Chapter – 19 - Plinth Protection and Drains**	Rs.		/-
9.00	**Chapter – 22 - Water Proofing and Roof Treatment**	Rs.		/-
10.00	**Chapter – 24 - Anti-Termite Treatment Works**	Rs.		/-
11.00	**Road Work**	Rs.		/-
Total		Rs.		**/-**

Item No.	MPWD 2015-16 / DSR 2018	Description of Item	Quantity	Unit	Rate Rs.	Amount Rs.	
1.00	**1.0**	**Chapter – 1 - Earth Work**					
1.01	1.1	Earthwork in excavation upto a depth of 2m below the existing ground level for foundation trenches of foundations, footings of column/ walls, retaining walls, septic tank etc. including bailing out water where necessary and removal of surplus earth with all lead and lifts as directed and specified for the following classification of soils.					
		In ordinary soil	1287.00	Cum			/-
1.02	DSR 2018/ 2.30	Excavating holes more than 0.10 cum & upto 0.5 cum including getting out the excavated soil, then returning the soil as required in layers not exceeding 20cm in depth, including consolidating each deposited layer by ramming, watering etc, disposing of surplus excavated soil, as directed within a lead of 50 m and lift upto 1.5 m.					
	DSR 2018/ 2.30.1	All kinds of soil	200.00	Each			/-
1.03	1.4	Earthwork in filling including necessary carriage, watering, ramming etc. complete as directed and specified.					
	1.4.1	Earth/ Sand filling in plinth in layers not exceeding 150mm thick					
	(a)	With earth/stone dust obtained by carriage upto 8 km	128.00	Cum			/-
	(b)	With available excavated earth including breaking of clods, consolidating each layer by ramming and watering with all lead and lifts.	1202.00	Cum			/-
		Total Earth Work :					

Item No.	MPWD 2015-16 / DSR 2018	Description of Item	Quantity	Unit	Rate Rs.	Amount Rs.	
2.00	**2.0**	**Chapter – 2 - Cement Concrete Works**					
2.01	2.1	Plain cement concrete works with coarse aggregate of sizes 13mm to 32mm in foundation bed for footing steps, walls, brick works etc. as directed and specified including dewatering if necessary, and curing complete (shuttering where necessary shall be measured and paid separately).					
		In prop. 1:4:8 (1 cement:4 coarse sand : 8 coarse agg. by volume (using mixture machine)	128.00	Cum			/-
2.02	2.2	Plain cement concrete floor base in prop 1:3:6 laid in alternate bays as specified with coarse aggregate of size 13mm to 32mm including dewatering if necessary, and curing etc. complete.					
		100 mm thick in prop 1:3:6	15.00	Sqm			/-
2.03	2.3	Providing and laying 25mm thick damp proof course with cement concrete in prop 1:1.5:3 with graded stone aggregate of 10mm down nominal size including providing approved damp proof admixture in proportion as recommended by the manufacturer including curing etc. complete as directed.	7.00	Sqm			/-
2.04	2.6	Providing and laying Concrete in Reinforced Cement Concrete Works Using Batching Plant/ RMC/ Truck mounted batching plant including Transit Mixer and Concrete Pump with coarse sand & 20mm down graded stone aggregate including dewatering if necessary, and curing complete with all necessary laboratory tests etc. but excluding cost of form work and reinforcement for reinforced cement concrete work (form work and reinforcement will be measured and paid separately). (Without using admixture, plasticiser)					
		RCC Grade M35	316.00	Cum			/-
2.05	2.8	Supplying, fitting and fixing in position reinforcement bars upto 1st floor level, conforming to relevant I.S. Code for R.C.C. work/ R.B. walling including straightening, cleaning, cutting and bending to proper shapes and length as per details, supplying and binding with 20G annealed black wire and placing in position with proper blocks, supports, chairs, spacers etc. complete. (Rates inclusive of all wastage, lappage, hooks, chairs, anchorage etc. and no measurements for the same is required)					
	a)	From Primary Sources like TATA/ SAIL/ ESSAR/ JINDAL/ SHYAM/ RINL					
	(i)	TMT Corrosion resistant steel (CRS) reinforcement bar	343.00	Qntl			/-
2.06	2.10	Providing form work of ordinary timber planking of thickness not less than 25mm and removal of the same for concrete members so as to give a rough finish including centering, shuttering, strutting and propping etc., for height of propping and centering of supporting floor to the soffit of the concrete member not exceeding 4.0M as specified for the following items:					
	a)	Foundation, footings, bases of columns, pile cap, raft and mass concrete works etc.	54.00	Sqm			/-

Item No.	MPWD 2015-16 / DSR 2018	Description of Item	Quantity	Unit	Rate Rs.	Amount Rs.	
2.07	2.11	Providing form work of 12mm thick Plywood Board and removal of the same for concrete members so as to give a rough finish including centering, shuttering, strutting and propping etc., for height of propping and centering of supporting floor to the soffit of the concrete member not exceeding 4.0M as specified for the following items:					
	(a)	Columns, Pillars, Posts & Strut of square/ rectangular/ polygonal in plan or any shape like Tee/L etc. having plane vertical face	159.00	Sqm			/-
	(b)	Sides and Soffits of Beams, beam haunchings, cantilever girders, bressumers, lintels and horizontal ties. For depth exceeding 1.0M.	431.00	Sqm			/-
	(c)	Flat Surfaces such as soffits of suspended floors, roofs, landings, cantilever slabs, chajjas, balconies and the like. Floors etc. upto 200mm in thickness.	133.00	Sqm			/-
	(d)	Vertical surface such as walls (any thickness), parapet walls, partitions and the like including attached pilasters, buttresses, plinth and string courses and the like.	465.00	Sqm			/-
	(e)	Staircase with sloping or stepped soffits including risers and stringers but excluding Landing.	377.00	Sqm			/-
		Total Cement Concrete Works :					
3.00	**3.0**	**Chapter – 3 - Flooring Works**					
3.01	3.31	Kota-stone slab flooring of 18 mm thick over 20mm thick base of cement plaster 1:6 (1 cement : 6 coarse sand) laid over and jointed with grey cement slurry mixed with pigment to match the shade of the slab including rubbing and polishing complete.					
		Slab above 0.4sq.m. size	135.00	Sqm			/-
3.02	3.32	Kota stone slab of 18 mm thick in riser of steps, skirting, dado and pillars laid with 10mm thick cement plaster 1:3 (1 cement : 3 coarse sand) and jointed with grey cement slurry mixed with pigment to match the shade of the slabs including rubbing and polishing complete.					
		Slab above 0.4sq.m. size	21.00	Sqm			/-
3.03	3.55	Providing, Supplying, fitting, fixing andlaying of dressed stone block wallingand tile slab (Cherra/local stoneblock) laid on 25mm thick base incement mortar 1:3 and jointed withgrey cement slurry including clearingrubbing etc. complete as directed.					
	C)	Size 300mm x 150mm x 50mm	1445.00	Sqm			/-
		Total Flooring Work :					

Item No.	MPWD 2015-16 / DSR 2018	Description of Item	Quantity	Unit	Rate Rs.	Amount Rs.	
4.00	**4.0**	**Chapter – 4 - Masonry Works**					
4.01	4.16	Autoclave Aerated Concrete Block work using AAC block conforming to IS-2185 (Part-III) in cement mortar in prop 1:5 (1 cement: 5 sand) including racking out joints and curing complete as per specification and as directed.					
	a)	In Sub-structure upto plinth level including dewatering if necessary					
	iii)	AAC Blocks of size 600mm x 200mm x 150mm	49.00	Cum			/-
		Total Masonry Works :					
5.00	**5.0**	**Chapter – 5 - Plastering Works**					
5.01	5.1	10 mm thick Cement plaster in single coat on fair side of brick/concrete walls for interior plastering up to 1st floor level including arises or rounded angles not exceeding 80mm girth and finished even and smooth including curing complete as directed.					
		In cement mortar 1:6	367.00	Sqm			/-
5.02	5.7	Extra over item no 5.1 to 5.6 for plastering on celling and soffits of stairs up to 1st floor level (instead of plastering on walls) including curing complete as directed.	142.00	Sqm			/-
5.03	5.4	20 mm thick Cement plaster on rough side in two coats (backing coat 15 mm and finishing coat 5mm thick) on single or half brick walls for interior plastering up to 1st floor level including arises, internal rounded angles, chamfers and / or rounded angles not exceeding 80mm in girth and finished even and smooth including curing complete as directed.					
		In cement mortar 1:4	199.00	Sqm			/-
5.04	5.6	Extra over item no 5.1 to 5.5 for providing and mixing water proofing materials in cement mortar in prop as recommended by the manufacturer including curing complete as directed.					
		20 mm thick plaster					
		In cement mortar 1:4	199.00	Sqm			/-
5.05	15.69	Painting two coats (excluding priming coat) on new steel and other metal surface with enamel paint of approved brand and manufacture(Asian paint/ Berger paint/ ICI paint/ J & N paint/ Nerolac) to give an even shade including cleaning the surface of all dirt, dust and other foreign matter.					
		Surfaces over 100mm in width or girth.					
		General purpose (Asian paint/ Berger paint/ ICI paint/ J & N paint/ Nerolac).	727.00	Sqm			/-
5.06	15.35	Providing surface preparation for walls, celling etc. using average 2 mm thick plaster of paris including clearing, rubbing with sand paper, filling gaps, depression etc. where necessary, with chalk powder and plaster of paris paste, making the surface even and smooth complete at all levels as specified and directed.	367.00	Sqm			/-
5.07	15.40	Wall painting (two coats) with acrylic emulsion paint approved brand and manufacture (Asian paint/ Berger paint/ ICI paint/ J & N paint/ Nerolac) on new surface to give an even shade after thoroughly brushing the surfaces free from mortar droppings and other foreign matter and sand papered smooth.	367.00	Sqm			/-
5.08	15.41	Extra over item no 15.40 above for every subsequent coat of wall painting with acrylic emulsion paint of approved brand and manufacture (Asian paint/ Berger paint/ ICI paint/ J & N paint/ Nerolac).	367.00	Sqm			/-

Item No.	MPWD 2015-16 / DSR 2018	Description of Item	Quantity	Unit	Rate Rs.	Amount Rs.	
5.09	15.53	Finishing wall with two coats of acrylic emulsion exterior coatings of Unicem "Rakshak" brand of required shade by thinning 1ltr. of paint with 750ml of water to give an even shade after thoroughly brooming the surfaces to remove all dirt and remains of loose powdered materials as specified and directed by the department.	199.00	Sqm			/-
5.10	15.38	Providing two coats of Birla White Wall Care Putty (Water Resistant White Cement based putty for concrete/ mortar walls and ceiling both internal and external) after removing all loosely adhering material from the wall surface with the help of emery stone, putty blade or wire brush and moistening the wall with sufficient quantity of clean water as specified and directed by the department. (Total thickness of two coats is maximum 1.5mm)					
	b)	For 1.0mm thick application	199.00	Sqm			/-
		Total Plastering Work :					
6.00	**6.0**	**Chapter – 6 - Ceiling, Wall Lining and Partition Works**					
6.01	DSR 2018/ 12.21	Providing gola 75x75 mm in cement concrete 1:2:4 (1 cement : 2 coarse sand : 4 stone aggregate 10 mm and down gauge), including finishing with cement mortar 1:3 (1 cement : 3 fine sand) as per standard design					
	DSR 2018/ 12.21.1	In 75x75 mm deep chase	47.00	metre			/-
6.02	DSR 2018/ 12.22	Making khurras 45x45 cm with c.c. 1:2:4 average 5 cms thick including supply of all materials, labour, T and P etc. required for proper completion of work.	3.00	each			/-
		Total Ceiling, Wall Lining and Partition Works :					
7.00	**9.0**	**Chapter – 9 - Aluminium Work**					
7.01	DSR 2018/ 10.25	Steel work welded in built up sections/ framed work, including cutting, hoisting, fixing in position and applying a priming coat of approved steel primer using structural steel etc. as required.					
	DSR 2018/ 10.25.2	In gratings, frames, guard bar, ladder, railings, brackets, gates and similar works	194.00	Kgs			/-
		Total Aluminium Works :					

Item No.	MPWD 2015-16 / DSR 2018	Description of Item	Quantity	Unit	Rate Rs.	Amount Rs.	
8.00	**19.0**	**Chapter – 19 - Plinth Protection and Drains**					
8.01	19.1	Plinth Protection by providing 50mm thick Cement Concrete base in prop 1:3:6 (1 cement:3 coarse sand : 6 coarse agg. of 20mm nominal size) with a layer of 10mm thick cement plaster in prop 1:3 and finishing with a floating coat of neat cement including necessary levelling and preparing the subgrade complete as directed	131.00	Sqm			/-
		Total Plinth Protection and Drains work :					
9.00	**22.0**	**Chapter – 22 - Water Proofing and Roof Treatment**					
9.01	DSR 2018/ 22.7	Providing and laying integral cement based water proofing treatment including preparation of surface as required for treatment of roofs, balconies, terraces etc consisting of following operations: (a) Applying a slurry coat of neat cement using 2.75 kg/sqm of cement admixed with water proofing compound conforming to IS. 2645 and approved by Engineer-in-charge over the RCC slab including adjoining walls upto 300 mm height including cleaning the surface before treatment.					
		(b) Laying brick bats with mortar using broken bricks/brick bats 25 mm to 115 mm size with 50% of cement mortar 1:5 (1 cement : 5 coarse sand) admixed with water proofing compound conforming to IS : 2645 and approved by Engineer-in-charge over 20 mm thick layer of cement mortar of mix 1:5 (1 cement :5 coarse sand) admixed with water proofing compound conforming to IS : 2645 and approved by Engineer-in-charge to required slope and treating similarly the adjoining walls upto 300 mm height including rounding of junctions of walls and slabs.					
		(c) After two days of proper curing applying a second coat of cement slurry using 2.75 kg/ sqm of cement admixed with water proofing compound conforming to IS : 2645 and approved by Engineerin- charge. (d) Finishing the surface with 20 mm thick jointless cement mortar of mix 1:4 (1 cement :4 coarse sand) admixed with water proofing compound conforming to IS : 2645 and approved by Engineerin-charge including laying glass fibre cloth of approved quality in top layer of plaster and finally finishing the surface with trowel with neat cement slurry and making pattern of 300x300 mm square 3 mm deep.					
		(e) The whole terrace so finished shall be flooded with water for a minimum period of two weeks for curing and for final test."All above operations to be done in order and as directed and specified by the Engineer-in-Charge :					
	DSR 2018/ 22.7.1	With average thickness of 120 mm and minimum thickness at khurra as 65 mm.	145.00	Sqm			/-
		Total Water Proofing work :					
10.00	**24.0**	**Chapter – 24 - Anti-Termite Treatment Works**					

Item No.	MPWD 2015-16 / DSR 2018	Description of Item	Quantity	Unit	Rate Rs.	Amount Rs.	
10.01	24.1	Pre-construction anti - termite treatment at the bottom of foundation pits and walls on either side up to a height of 300mm from bottom of the excavation made for column plinth beam, wall, trenches etc. by applying the emulsion @ 5 (five) litres per square meter of the surface area before starting construction work (supplying of necessary tools and accessories by the contractor) as per the direction of the Department complete.					
		With aqueous emulsion having concentration 1:499 with Premise 350 SC (Imidachloprid 30.5% SC) and water, i.e. 0.07% in water.	1043.00	Sqm			/-
10.02	24.2	Pre-construction anti - termite treatment in the back fill in immediate contact with the foundation structure after completion, column, wall etc. to a depth of 450mm and width 300mm (when required refill in 200mm thick layers) applying the emulsion @ 5 (five) litres per square meter towards the concrete and masonry walls so as to ensure earth in contact with the structure well treated - with chemical (supplying of necessary tools and accessories by the contractor) as per the direction of the Department complete.					
		With aqueous emulsion having concentration 1:499 with Premise 350 SC (Imidachloprid 30.5% SC) and water, i.e. 0.07% in water.	1043.00	Sqm			/-
10.03	24.3	Pre-construction anti-termite treatment by applying in the entire levelled area after plinth filling and before laying floor by applying the emulsion @ 5 (five) litres per square meter of the surface to be spread with light rodding so as to ensure proper absorption by the filled up earth (supplying of necessary tools and accessories by the contractor) as per the direction of the Department complete.					
		With aqueous emulsion having concentration 1:499 with Premise 350 SC (Imidachloprid 30.5% SC) and water, i.e. 0.07% in water.	1043.00	Sqm			/-
		Total Anti-Termite Treatment Works :					
11.00	**16.0**	**ROAD WORK**					
11.01	DSR 2018/ 16.79	Providing, laying, spreading and compacting graded stone aggregate (size range 53 mm to 0.075 mm) to wet mix macadam (WMM) specification including premixing the material with water at OMC in for all leads & lifts, laying in uniform layers with mechanical paverfinisher in sub- base / base course on well prepared surface and compacting with vibratory roller of 8 to 10 tonne capacity to achievethe desired density, complete as per specifications and directions of Engineer-in-Charge.	181.00	Cum			/-
11.02	DSR 2018/ 16.78	Construction of granular sub-base by providing close graded Material conforming to specifications, mixing in a mechanical mix plant at OMC, carriage of mixed material by tippers to work site, for all leads & lifts, spreading in uniform layers of specified thickness with motor grader on prepared surface and compacting with vibratory power roller to achieve the desired density, complete as per specifications and directions of Engineer-in-Charge.					

Item No.	MPWD 2015-16 / DSR 2018	Description of Item	Quantity	Unit	Rate Rs.	Amount Rs.	
	DSR 2018/ 16.78.1	With material conforming to Grade-I (size range 75 mm to 0.075 mm) having CBR Value-30	145.00	Cum			/-
11.03	DSR 2018/ 16.30	Providing and applying tack coat using hot straight run bitumen of grade VG - 10, including heating the bitumen, spraying the bitumen with mechanically operated spray unit fitted on bitumen boiler, cleaning and preparing the existing road surface as per specifications :					
(a)	DSR 2018/ 16.30.1	On W.B.M. @ 0.75 Kg I sqm	724.00	Sqm			/-
(b)	DSR 2018/ 16.30.2	On bituminous surface @ 0.50 Kg I sqm	724.00	Sqm			/-
11.04	DSR 2018/ 16.54	Providing and laying Dense Graded Bituminous Macadam using crushed stone aggregates of specified grading, premixed with bituminous binder and filler, transporting the hot mix to work site by tippers, laying with paver finisher equiped with electronic sensor to the required grade, level and alignment and rolling with smooth wheeled, vibratory and tandem rollers as per specifications to achievethe desired compaction and density, complete as per specificatons and directions of Engineer-in-Charge.					
	DSR 2018/ 16.54.2	50 to 100 mm average compacted thickness with bitumen of grade VG-30 @ 5% (percentage by weight of total mix) and lime filler @ 2% (percentage by weight of Aggregate) prepared in Drum Type Hot Mix Plant of 60-90 TPH capacity.	48.00	Cum			/-
11.05	DSR 2018/ 16.57	Providing and laying Bituminous concrete using crushed stone aggregates of specified grading, premixed with bituminous binder and filler, transporting the hot mix to work site by tippers, laying with paver finisher equiped with electronic sensor to the required grade, level and alignment and rolling with smooth wheeled, vibratory and tandem rollers to achieve the desired compaction and density as per specification, complete and as per directions of Engineer-in-Charge.					
	DSR 2018/ 16.57.2	40/50 mm compacted thickness with bitumen of grade VG-30 @ 5.5% (percentage by weight of total mix) and lime filler @ 3% (percentage by weight of Aggregate) and waste plastic additive @ 8% (percentage by weight of bitumen) prepared in Batch Type Hot Mix Plant of 100- 120 TPH capacity.	29.00	Cum			/-
11.06	DSR 2018/ 16.69	Providing and laying at or near ground level factory made kerb stone of M-25 grade cement concrete in position to the required line, level and curvature, jointed with cement mortar 1:3 (1 cement: 3 coarse sand), including making joints with or without grooves (thickness of joints except at sharp curve shall not to more than 5mm), including making drainage opening wherever required complete etc. as per direction of Engineer-in-charge (length of finished kerb edging shall be measured for payment). (Precast C.C. kerb stone shall be approved by Engineer-in-charge).	24.00	Cum			/-

Item No.	MPWD 2015-16 / DSR 2018	Description of Item	Quantity	Unit	Rate Rs.	Amount Rs.	
11.07	DSR 2018/ 16.62	Providing and applying 2.5 mm thick road marking strips (retroreflective) of specified shade/ colour using hot thermoplastic material by fully/ semi automatic thermoplastic paint applicator machine fitted with profile shoe, glass beads dispenser, propane tank heater and profile shoe heater, driven by experienced operator on road surface including cost of material, labour, T&P, cleaning the road surface of all dirt, seals, oil, grease and foreign material etc. complete as per direction of Engineer-in-charge and accordance with applicable specifications.	68.00	Sqm			
11.08	DSR 2018/ 16.18	Fencing with angle iron post placed at required distance embedded in cement concrete blocks, every 15th post, last but one end post and corner post shall be strutted on both sides and end post on one side only and provided with horizontal lines and two diagonals interwoven with horizontal wires, of barbed wire weighing 9.38 kg per 100 m (minimum), between the two posts fitted and fixed with G.I. staples, turn buckles etc. complete. (Cost of posts, struts, earth work and concrete work to be paid for separately). Payment to be made per metre cost of total length of barbed wire used.					
	DSR 2018/ 16.18.1	With G.I. barbed wire	606.00	metre			/-
11.09	DSR 2018/ 16.19	Supplying at site Angle iron post & strut of required size including bottom to be split and bent at right angle in opposite direction for 10 cm length and drilling holes upto 10 mm dia. etc. complete.	1442.00	Kg			/-
11.10	DSR 2018/ 16.75	Providing and laying C.C. pavement of mix M-25 with ready mixed concrete from batching plant. The ready mixed concrete shall be laid and finished with screed board vibrator , vacuum dewatering process and finally finished by floating, brooming with wire brush etc. complete as per specifications and directions of Engineer-incharge. (The panel shuttering work shall be paid for separately). (Note:- Cement content considered in this item is @ 330 kg/cum. Excess/less cement used as per design mix is payable/ recoverable separately).	1.00	Cum			/-
11.11	DSR 2018/ 5.26	Providing and filling in position, blown bitumen in expansion joints.	1.00	Cum			/-
		Total Road work :					

S No.	Item Description	Nos	Length	Width	Height	Quantity	Unit
1.00	**Chapter – 1 - Earth Work**						
1.01	**Earthwork in excavation upto a depth of 2m below the existing ground level for foundation trenches of foundations, footings of column/ walls, retaining walls, septic tank etc. including bailing out water where necessary and removal of surplus earth with all lead and lifts as directed and specified for the following classification of soils.**						
	In ordinary soil						
	External Development						
	Road area	1	804.13		0.56	446.29	
	Amphitheter						
	Landing	1	31.00	4.37	0.40	54.19	
	Landing	1	31.00	3.00	0.40	37.20	
	Waist slab	2	16.45	31.00	0.40	407.93	
	Substation						
	Raft	1	220.44		2.00	440.88	
	Floor cutting	1	172.50		0.25	43.13	
						1429.62	**Cum**
1.02	**Excavating holes more than 0.10 cum & upto 0.5 cum including getting out the excavated soil, then returning the soil as required in layers not exceeding 20cm in depth, including consolidating each deposited layer by ramming, watering etc, disposing of surplus excavated soil, as directed within a lead of 50 m and lift upto 1.5 m.**						
	All kinds of soil						
	Fencing	222				222.00	
						222.00	**Each**
1.03	**Earthwork in filling including necessary carriage, watering, ramming etc. complete as directed and specified.**						
	Earth/ Sand filling in plinth in layers not exceeding 150mm thick						
a)	**With earth/stone dust obtained by carriage upto 8 km**						
	External Development						
	Amphitheter						
	Landing	1	31.00	4.37	0.10	13.55	
	Landing	1	31.00	3.00	0.10	9.30	
	Waist slab	2	16.45	31.00	0.10	101.98	
	Substation	1	14.54	11.27	0.10	16.39	
						141.22	**Cum**
b)	**With available excavated earth including breaking of clods, consolidating each layer by ramming and watering with all lead and lifts.**						
	Considerd 35% for back filling qty					1334.89	
						1334.89	**Cum**
2.00	**Chapter – 2 - Cement Concrete Works**						
2.01	**Plain cement concrete works with coarse aggregate of sizes 13mm to 32mm in foundation bed for footing steps, walls, brick works etc. as directed and specified including dewatering if necessary, and curing complete (shuttering where necessary shall be measured and paid separately).**						
	In prop. 1:4:8 (1 cement:4 coarse sand : 8 coarse agg. by volume (using mixture machine)						
	External development						
	Amphiteater						
	Landing	1	31.00	4.37	0.10	13.55	
	Landing	1	31.00	3.00	0.10	9.30	
	Waist slab	2	16.45	31.00	0.10	101.98	
	Substation						
	PCC	1	17.00			17.00	
						141.83	**Cum**
2.02	**Plain cement concrete floor base in prop 1:3:6 laid in alternate bays as specified with coarse aggregate of size 13mm to 32mm including dewatering if necessary, and curing etc. complete.**						

S No.	Item Description	Nos	Length	Width	Height	Quantity	Unit
	100 mm thick in prop 1:3:6						
	Substation	1	14.54	11.27	0.10	16.39	
						16.39	**Sqm**
2.03	**Providing and laying 25mm thick damp proof course with cement concrete in prop 1:1.5:3 with graded stone aggregate of 10mm down nominal size including providing approved damp proof admixture in proportion as recommended by the manufacturer including curing etc. complete as directed.**						
	External development						
	Substation						
	PB	1	31.66	0.23		7.28	
						7.28	**Sqm**
2.04	**Providing and laying Concrete in Reinforced Cement Concrete Works Using Batching Plant/ RMC/ Truck mounted batching plant including Transit Mixer and Concrete Pump with coarse sand & 20mm down graded stone aggregate including dewatering if necessary, and curing complete with all necessary laboratory tests etc. but excluding cost of form work and reinforcement for reinforced cement concrete work (form work and reinforcement will be measured and paid separately). (Without using admixture, plasticiser)**						
	RCC Grade M35						

S No.	Item Description	Nos	Length	Width	Height	Quantity	Unit
	External development						
	Amphiteater						
	Landing	1	31.00	4.37	0.15	20.32	
	Landing	1	31.00	3.00	0.15	13.95	
	Waist slab	2	16.45	31.00	0.15	152.97	
	Tread	30	31.00	1.00	0.15	69.75	
	Lintel						
	Door (2000x2400)	2	2.00	0.23	0.20	0.09	
	WC Door (650X2100)	20	0.65	0.23	0.20	0.30	
	Counter top						
	Counter top (toilet)	2	5.55	0.67	0.08	0.28	
	Substation						
	Upto plinth						
	Foundation	1	10.00			5.00	
	Grade slab	1	32.00			16.00	
	Trench base slab	1	1.00			0.50	
	Trench wall	1	4.00			2.00	
	Column	1	2.00			1.00	
	Shear wall	1	2.00			1.00	
	Beam	1	19.00			9.50	
	Above plinth						
	Column	1	6.00			3.00	
	Shear wall	1	5.00			2.50	
	Beam	1	37.00			18.50	
	Slab	1	20.00			10.00	
	NS Wall	1	47.00			23.50	
						350.16	**Cum**
2.05	**Supplying, fitting and fixing in position reinforcement bars upto 1st floor level, conforming to relevant I.S. Code for R.C.C. work/ R.B. walling including straightening, cleaning, cutting and bending to proper shapes and length as per details, supplying and binding with 20G annealed black wire and placing in position with proper blocks, supports, chairs, spacers etc. complete. (Rates inclusive of all wastage, lappage, hooks, chairs, anchorage etc. and no measurements for the same is required)**						
	From Primary Sources like TATA/ SAIL/ ESSAR/ JINDAL/ SHYAM/ RINL						
	TMT Corrosion resistant steel (CRS) reinforcement bar						
	External development						
	Amphiteater						
	Staircase			100.00	187.24	18724.00	
	Substation						
	Foundation				737.00	737.00	
	Grade slab				1590.00	1590.00	
	Trench base slab				75.00	75.00	
	Trench wall				343.00	343.00	
	Column				486.00	486.00	
	Shear wall				336.00	336.00	
	Beam				2805.00	2805.00	
	Column				1126.00	1126.00	
	Shear wall				778.00	778.00	
	Beam				5576.00	5576.00	
	Slab				1631.00	1631.00	
	NS Wall				3774.00	3774.00	
	VDF Flooring			40.00	1.00	40.00	
						38021.00	
						380.21	**Qntl**
2.06	**Providing form work of ordinary timber planking of thickness not less than 25mm and removal of the same for concrete members so as to give a rough finish including centering, shuttering, strutting and propping etc., for height of propping and centering of supporting floor to the soffit of the concrete member not exceeding 4.0M as specified for the following items:**						
a)	**Foundation, footings, bases of columns, pile cap, raft and mass concrete works etc.**						
	External Development						

S No.	Item Description	Nos	Length	Width	Height	Quantity	Unit
	Substation						
	Raft	1	60.00			60.00	
						60.00	**Sqm**
2.07	**Providing form work of 12mm thick Plywood Board and removal of the same for concrete members so as to give a rough finish including centering, shuttering, strutting and propping etc., for height of propping and centering of supporting floor to the soffit of the concrete member not exceeding 4.0M as specified for the following items:**						
(a)	**Columns, Pillars, Posts & Strut of square/ rectangular/ polygonal in plan or any shape like Tee/L etc. having plane vertical face**						
	Substation						
	Column	1	80.00		2.20	176.00	
						176.00	**Sqm**
b)	**Sides and Soffits of Beams, beam haunchings, cantilever girders, bressumers, lintels and horizontal ties. For depth exceeding 1.0M.**						
	Substation						
	Beam	1	478.00			478.00	
						478.00	**Sqm**
c)	**Flat Surfaces such as soffits of suspended floors, roofs, landings, cantilever slabs, chajjas, balconies and the like. Floors etc. upto 200mm in thickness**						
	Substation						
	Trench base slab	1	11.00			11.00	
	Slab	1	136.00			136.00	
						147.00	**Sqm**
d)	**Vertical surface such as walls (any thickness), parapet walls, partitions and the like including attached pilasters, buttresses, plinth and string courses and the like.**						
	External Development						
	Substation						
	Trench wall	1	43.00			43.00	
	Shear wall	1	63.00			63.00	
	NS Wall	1	410.00			410.00	
						516.00	**Sqm**
e)	**Staircase with sloping or stepped soffits including risers and stringers but excluding Landing.**						
	External Development						
	Amphiteater						
	Tread	30	31.00	0.45		418.50	
						418.50	**Sqm**
3.00	**Chapter – 3 - Flooring Works**						
3.01	**Kota-stone slab flooring of 18 mm thick over 20mm thick base of cement plaster 1:6 (1 cement : 6 coarse sand) laid over and jointed with grey cement slurry mixed with pigment to match the shade of the slab including rubbing and polishing complete.**						
	Slab above 0.4sq.m. size						
	External Development						
	Substation						
	Floor Area	1	14.52	11.04		160.30	
	Less trench	-1	10.73	1.00		-10.73	
						149.57	**Sqm**
3.02	**Kota stone slab of 18 mm thick in riser of steps, skirting, dado and pillars laid with 10mm thick cement plaster 1:3 (1 cement : 3 coarse sand) and jointed with grey cement slurry mixed with pigment to match the shade of the slabs including rubbing and polishing complete.**						
	Slab above 0.4sq.m. size						
	Add 15% extra for skirting	15%	149.57			22.44	

S No.	Item Description	Nos	Length	Width	Height	Quantity	Unit
						22.44	**Sqm**
3.03	**Providing, Supplying, fitting, fixing andlaying of dressed stone block wallingand tile slab (Cherra/local stoneblock) laid on 25mm thick base incement mortar 1:3 and jointed withgrey cement slurry including clearingrubbing etc. complete as directed.**						
	Size 300mm x 150mm x 50mm						
	External Development						
	Amphitheter						
	Landing	1	31.00	4.37		135.47	
	Landing	1	31.00	3.00		93.00	
	Tread	30	31.00	1.00		930.00	
	Tread	32	31.00		0.45	446.40	
						1604.87	**Sqm**
4.00	**Chapter – 4 - Masonry Works**						
4.01	**Autoclave Aerated Concrete Block work using AAC block conforming to IS-2185 (Part-III) in cement mortar in prop 1:5 (1 cement: 5 sand) including racking out joints and curing complete as per specification and as directed.**						
	In Sub-structure upto plinth level including dewatering if necessary						
	AAC Blocks of size 600mm x 200mm x 150mm						
	External Development						
	Substation						
	Outer wall of Meter Room	1	3.46	0.23	3.20	3.20	
	Outer wall of Meter Room	1	3.23	0.23	3.20	3.20	
	Less Opening	-1	1.50	0.23	2.40	2.40	
	Wall Between of HT meter Room & Substation Block	1	3.00	0.23	3.20	3.20	
	Wall Between of HT meter Room & HT Panel Room	1	3.00	0.23	3.20	3.20	
	Outer wall of HT Panel Room	1	4.81	0.23	3.20	3.20	
	Less Opening	-1	1.50	0.23	2.40	2.40	
	Wall Between of HT panel Room & Substation Block	1	4.81	0.23	3.20	3.20	
	Less Opening	-1	1.50	0.23	2.40	2.40	
	Wall Between of HT Panel Room & lT Panel Room	1	6.23	0.23	3.20	3.20	
	Outer wall of LT Panel Room	1	3.23	0.23	3.20	3.20	
	Outer wall of LT Panel Room	1	6.23	0.23	3.20	3.20	
	Wall Between of LT panel Room & Substation Block	1	3.00	0.23	3.20	3.20	
	Less Opening	-1	1.50	0.23	2.40	2.40	
	Outer wall of Substation Block	1	11.54	0.23	3.20	3.20	
	Outer wall of Substation Block	1	11.27	0.23	3.20	3.20	
	Outer wall of Substation Block	1	8.31	0.23	3.20	3.20	
	Less Opening	-1	4.96	0.23	2.40	2.40	
						53.60	**Cum**
5.00	**Chapter – 5 - Plastering Works**						
5.01	**10 mm thick Cement plaster in single coat on fair side of brick/concrete walls for interior plastering up to 1st floor level including arises or rounded angles not exceeding 80mm girth and finished even and smooth including curing complete as directed.**						
	In cement mortar 1:6						
	External Development						
	Internal Wall plaster						
	Substation						
	Outer wall of Meter Room	1	3.46		3.20	11.07	
	Outer wall of Meter Room	1	3.23		3.20	10.34	
	Less Opening	-1	1.50		2.40	-3.60	
	Wall Between of HT meter Room & Substation Block	1	3.00		3.20	19.20	
	Wall Between of HT meter Room & HT Panel Room	1	3.00		3.20	19.20	
	Outer wall of HT Panel Room	1	4.81		3.20	15.39	
	Less Opening	-1	1.50		2.40	-3.60	
	Wall Between of HT panel Room & Substation Block	1	4.81		3.20	15.39	
	Less Opening	-1	1.50		2.40	-3.60	
	Wall Between of HT Panel Room & lT Panel Room	1	6.23		3.20	39.87	
	Outer wall of LT Panel Room	1	3.23		3.20	10.34	
	Outer wall of LT Panel Room	1	6.23		3.20	19.94	
	Wall Between of LT panel Room & Substation Block	1	3.00		3.20	19.20	
	Less Opening	-1	1.50		2.40	-7.20	
	Outer wall of Substation Block	1	11.54		3.20	36.93	

S No.	Item Description	Nos	Length	Width	Height	Quantity	Unit
	Outer wall of Substation Block	1	11.27		3.20	36.06	
	Outer wall of Substation Block	1	8.31		3.20	26.59	
	Less Opening	-1	4.96		2.40	-11.90	
	Ceiling plaster						
	Area of HT Meter Room	1	3.00	3.00		9.00	
	Area of HT Panel Room	1	4.58	3.00		13.74	
	Area of LT Panel Room	1	6.00	3.00		18.00	
	Area of Substation Block	1	116.31			116.31	
						406.67	**Sqm**
5.02	**Extra over item no 5.1 to 5.6 for plastering on celling and soffits of stairs up to 1st floor level (instead of plastering on walls) including curing complete as directed.**						
	Substation						
	Ceiling plaster qty	1	157.05			157.05	
						157.05	**Sqm**
5.03	**20 mm thick Cement plaster on rough side in two coats (backing coat 15 mm and finishing coat 5mm thick) on single or half brick walls for interior plastering up to 1st floor level including arises, internal rounded angles, chamfers and / or rounded angles not exceeding 80mm in girth and finished even and smooth including curing complete as directed.**						
	In cement mortar 1:4						
	External development						
	Substation						
	External Plaster	1	53.00		3.70	196.10	
	Parapet wall	1	65.70		0.30	39.42	
	Less Opening	-1	4.96		2.40	-11.90	
	Less Opening	-1	1.50		2.40	-3.60	
						220.02	**Sqm**
5.04	**Extra over item no 5.1 to 5.5 for providing and mixing water proofing materials in cement mortar in prop as recommended by the manufacturer including curing complete as directed.**						
	20 mm thick plaster						
	In cement mortar 1:4						
	Qty same as external plaster	1	220.02			220.02	
						220.02	**Sqm**
5.05	**Painting two coats (excluding priming coat) on new steel and other metal surface with enamel paint of approved brand and manufacture(Asian paint/ Berger paint/ ICI paint/ J & N paint/ Nerolac) to give an even shade including cleaning the surface of all dirt, dust and other foreign matter.**						
	Surfaces over 100mm in width or girth.						
	General purpose (Asian paint/ Berger paint/ ICI paint/ J & N paint/ Nerolac).						
	Fencing	1	673.10		1.20	807.72	
						807.72	**Sqm**
5.06	**Providing surface preparation for walls, celling etc. using average 2 mm thick plaster of paris including clearing, rubbing with sand paper, filling gaps, depression etc. where necessary, with chalk powder and plaster of paris paste, making the surface even and smooth complete at all levels as specified and directed.**						
	Internal plaster qty	1	249.62			249.62	
	Ceiling plaster qty	1	157.05			157.05	
						406.67	**Sqm**
5.07	**Wall painting (two coats) with acrylic emulsion paint approved brand and manufacture (Asian paint/ Berger paint/ ICI paint/ J & N paint/ Nerolac) on new surface to give an even shade after thoroughly brushing the surfaces free from mortar droppings and other foreign matter and sand papered smooth.**						
	Qty same as putty	1	406.67			406.67	
						406.67	**Sqm**

S No.	Item Description	Nos	Length	Width	Height	Quantity	Unit
5.08	**Extra over item no 15.40 above for every subsequent coat of wall painting with acrylic emulsion paint of approved brand and manufacture (Asian paint/ Berger paint/ ICI paint/ J & N paint/ Nerolac).**						
	Qty same as acrylic paint	1	406.67			406.67	
						406.67	**Sqm**
5.09	**Finishing wall with two coats of acrylic emulsion exterior coatings of Unicem "Rakshak" brand of required shade by thinning 1ltr. of paint with 750ml of water to give an even shade after thoroughly brooming the surfaces to remove all dirt and remains of loose powdered materials as specified and directed by the department.**						
	Qty same as External plaster	1	220.02			220.02	
						220.02	**Sqm**
5.10	**Providing two coats of Birla White Wall Care Putty (Water Resistant White Cement based putty for concrete/ mortar walls and ceiling both internal and external) after removing all loosely adhering material from the wall surface with the help of emery stone, putty blade or wire brush and moistening the wall with sufficient quantity of clean water as specified and directed by the department. (Total thickness of two coats is maximum 1.5mm)**						
	For 1.0mm thick application						
	Qty same as External plaster	1	220.02			220.02	
						220.02	**Sqm**
6.00	**Chapter – 6 - Ceiling, Wall Lining and Partition Works**						
6.01	**Providing gola 75x75 mm in cement concrete 1:2:4 (1 cement : 2 coarse sand : 4 stone aggregate 10 mm and down gauge), including finishing with cement mortar 1:3 (1 cement : 3 fine sand) as per standard design**						
	In 75x75 mm deep chase						
	External development						
	Substation						
	Terrace						
	Parapet Wall	1	14.52	11.04		51.12	
						51.12	**metre**
6.02	**Making khurras 45x45 cm with c.c. 1:2:4 average 5 cms thick including supply of all materials, labour, T and P etc. required for proper completion of work.**						
	External development						
	Toilet						
	Khurra					2.00	
	Substation						
	Khurra					1.00	
						3.00	**Nos**
7.00	**Chapter – 9 - Aluminium Work**						
7.01	**Steel work welded in built up sections/ framed work, including cutting, hoisting, fixing in position and applying a priming coat of approved steel primer using structural steel etc. as required.**						
	In gratings, frames, guard bar, ladder, railings, brackets, gates and similar works						
	External Development						
	Substation						
	Trench	1	4.73	1.00		4.73	
	Trench	1	6.00	1.00		6.00	
	20kg per sqm					214.60	
						214.60	**Kg**
8.00	**Chapter – 19 - Plinth Protection and Drains**						

S No.	Item Description	Nos	Length	Width	Height	Quantity	Unit
8.01	**Plinth Protection by providing 50mm thick Cement Concrete base in prop 1:3:6 (1 cement:3 coarse sand : 6 coarse agg. of 20mm nominal size) with a layer of 10mm thick cement plaster in prop 1:3 and finishing with a floating coat of neat cement including necessary levelling and preparing the subgrade complete as directed**						
	External Development						
	Building perimeter (Amphitheater)	1	144.74	1.00		144.74	
						144.74	**Sqm**
9.00	**Chapter – 22 - Water Proofing and Roof Treatment**						
9.01	**Providing and laying integral cement based water proofing treatment including preparation of surface as required for treatment of roofs, balconies, terraces etc consisting of following operations: (a) Applying a slurry coat of neat cement using 2.75 kg/sqm of cement admixed with water proofing compound conforming to IS. 2645 and approved by Engineer-in-charge over the RCC slab including adjoining walls upto 300 mm height including cleaning the surface before treatment.**						
	(b) Laying brick bats with mortar using broken bricks/brick bats 25 mm to 115 mm size with 50% of cement mortar 1:5 (1 cement : 5 coarse sand) admixed with water proofing compound conforming to IS : 2645 and approved by Engineer-in-charge over 20 mm thick layer of cement mortar of mix 1:5 (1 cement :5 coarse sand) admixed with water proofing compound conforming to IS : 2645 and approved by Engineer-in-charge to required slope and treating similarly the adjoining walls upto 300 mm height including rounding of junctions of walls and slabs.						
	(c) After two days of proper curing applying a second coat of cement slurry using 2.75 kg/ sqm of cement admixed with water proofing compound conforming to IS : 2645 and approved by Engineerin-charge. **(d) Finishing the surface with 20 mm thick jointless cement mortar of mix 1:4 (1 cement :4 coarse sand) admixed with water proofing compound conforming to IS : 2645 and approved by Engineerin-charge including laying glass fibre cloth of approved quality in top layer of plaster and finally finishing the surface with trowel with neat cement slurry and making pattern of 300x300 mm square 3 mm deep.**						
	(e) The whole terrace so finished shall be flooded with water for a minimum period of two weeks for curing and for final test."All above operations to be done in order and as directed and specified by the Engineer-in-Charge :						
	With average thickness of 120 mm and minimum thickness at khurra as 65 mm.						
	External Development						
	Substation						
	Area of terrace	1	160.52			160.52	
						160.52	**Sqm**
10.00	**Chapter – 24 - Anti-Termite Treatment Works**						
10.01	**Pre-construction anti - termite treatment at the bottom of foundation pits and walls on either side up to a height of 300mm from bottom of the excavation made for column** **plinth beam, wall, trenches etc. by applying the emulsion @ 5 (five) litres per square meter of the surface area before starting construction work (supplying of necessary tools and accessories by the contractor) as per the direction of the Department complete**						

S No.	Item Description	Nos	Length	Width	Height	Quantity	Unit
	With aqueous emulsion having concentration 1:499 with Premise 350 SC (Imidachloprid 30.5% SC) and water, i.e. 0.07% in water.						
	External development						
	Amphitheater						
	Under floors at plinth level	1	1158.48			1158.48	
						1158.48	**Sqm**
10.02	**Pre-construction anti - termite treatment in the back fill in immediate contact with the foundation structure after completion, column, wall etc. to a depth of 450mm and width 300mm (when required refill in 200mm thick layers) applying the emulsion @ 5 (five) litres per square meter towards the concrete and masonry walls so as to ensure earth in contact with the structure well treated - with chemical (supplying of necessary tools and accessories by the contractor) as per the direction of the Department complete.**						
	With aqueous emulsion having concentration 1:499 with Premise 350 SC (Imidachloprid 30.5% SC) and water, i.e. 0.07% in water.						
	Qty same as above	1	1158.48			1158.48	
						1158.48	**Sqm**
10.03	**Pre-construction anti-termite treatment by applying in the entire levelled area after plinth filling and before laying floor by applying the emulsion @ 5 (five) litres per square meter of the surface to be spread with light rodding so as to ensure proper absorption by the filled up earth (supplying of necessary tools and accessories by the contractor) as per the direction of the Department complete.**						
	With aqueous emulsion having concentration 1:499 with Premise 350 SC (Imidachloprid 30.5% SC) and water, i.e. 0.07% in water.						
	Qty same as above	1	1158.48			1158.48	
						1158.48	**Sqm**
11.00	**Road Work**						
12.01	**Providing, laying, spreading and compacting graded stone aggregate (size range 53 mm to 0.075 mm) to wet mix macadam (WMM) specification including premixing the material with water at OMC in for all leads & lifts, laying in uniform layers with mechanical paverfinisher in sub- base / base course on well prepared surface and compacting with vibratory roller of 8 to 10 tonne capacity to achievethe desired density, complete as per specifications and directions of Engineer-in-Charge.**						
11.01	Road area	1	943.17		0.25	235.79	
	Less circular area	-1	139.03		0.25	-34.76	
						201.03	**Cum**
11.02	**Construction of granular sub-base by providing close graded Material conforming to specifications, mixing in a mechanical mix plant at OMC, carriage of mixed material by tippers to work site, for all leads & lifts, spreading in uniform layers of specified thickness with motor grader on prepared surface and compacting with vibratory power roller to achieve the desired density, complete as per specifications and directions of Engineer-in-Charge.**						
	With material conforming to Grade-I (size range 75 mm to 0.075 mm) having CBR Value-30						
	Road Area	1	804.13		0.20	160.83	
						160.83	**Cum**

S No.	Item Description	Nos	Length	Width	Height	Quantity	Unit
11.03	**Providing and applying tack coat using hot straight run bitumen of grade VG - 10, including heating the bitumen, spraying the bitumen with mechanically operated spray unit fitted on bitumen boiler, cleaning and preparing the existing road surface as per specifications :**						
a)	**On W.B.M. @ 0.75 Kg I sqm**						
	Road Area	1	804.13			804.13	
						804.13	**Sqm**
b)	**On bituminous surface @ 0.50 Kg I sqm**						
	Road Area	1	804.13			804.13	
						804.13	**Sqm**
11.04	**Providing and laying Dense Graded Bituminous Macadam using crushed stone aggregates of specified grading, premixed with bituminous binder and filler, transporting the hot mix to work site by tippers, laying with paver finisher equiped with electronic sensor to the required grade, level and alignment and rolling with smooth wheeled, vibratory and tandem rollers as per specifications to achievethe desired compaction and density, complete as per specificatons and directions of Engineer-in-Charge.**						
	50 to 100 mm average compacted thickness with bitumen of grade VG-30 @ 5% (percentage by weight of total mix) and lime filler @ 2% (percentage by weight of Aggregate) prepared in Drum Type Hot Mix Plant of 60-90 TPH capacity.						
	Road Area	1	804.13		0.07	52.27	
						52.27	**Cum**
11.05	**Providing and laying Bituminous concrete using crushed stone aggregates of specified grading, premixed with bituminous binder and filler, transporting the hot mix to work site by tippers, laying with paver finisher equiped with electronic sensor to the required grade, level and alignment and rolling with smooth wheeled, vibratory and tandem rollers to achieve the desired compaction and density as per specification, complete and as per directions of Engineer-in-Charge.**						
	40/50 mm compacted thickness with bitumen of grade VG-30 @ 5.5% (percentage by weight of total mix) and lime filler @ 3% (percentage by weight of Aggregate) and waste plastic additive @ 8% (percentage by weight of bitumen) prepared in Batch Type Hot Mix Plant of 100- 120 TPH capacity.						
	Road Area	1	804.13		0.04	32.17	
						32.17	**Cum**
11.06	**Providing and laying at or near ground level factory made kerb stone of M-25 grade cement concrete in position to the required line, level and curvature, jointed with cement mortar 1:3 (1 cement: 3 coarse sand), including making joints with or without grooves (thickness of joints except at sharp curve shall not to more than 5mm), including making drainage opening wherever required complete etc. as per direction of Engineer-in-charge (length of finished kerb edging shall be measured for payment). (Precast C.C. kerb stone shall be approved by Engineer-in-charge).**						
		1	248.50	0.23	0.45	25.72	
						25.72	**Cum**

S No.	Item Description	Nos	Length	Width	Height	Quantity	Unit
11.07	**Providing and applying 2.5 mm thick road marking strips (retroreflective) of specified shade/ colour using hot thermoplastic material by fully/ semi automatic thermoplastic paint applicator machine fitted with profile shoe, glass beads dispenser, propane tank heater and profile shoe heater, driven by experienced operator on road surface including cost of material, labour, T&P, cleaning the road surface of all dirt, seals, oil, grease and foreign material etc. complete as per direction of Engineer-in-charge and accordance with applicable specifications.**						
		1	248.50	0.30		74.55	
						74.55	**Sqm**
11.08	**Fencing with angle iron post placed at required distance embedded in cement concrete blocks, every 15th post, last but one end post and corner post shall be strutted on both sides and end post on one side only and provided with horizontal lines and two diagonals interwoven with horizontal wires, of barbed wire weighing 9.38 kg per 100 m (minimum), between the two posts fitted and fixed with G.I. staples, turn buckles etc. complete. (Cost of posts, struts, earth work and concrete work to be paid for separately). Payment to be made per metre cost of total length of barbed wire used.**						
	With G.I. barbed wire						
	Fencing						
		1	673.10			673.10	
						673.10	**m**
11.09	**Supplying at site Angle iron post & strut of required size including bottom to be split and bent at right angle in opposite direction for 10 cm length and drilling holes upto 10 mm dia. etc. complete.**						
	Fencing						
	ISA 50X50X6	222	2.85		1.37	868.06	
	ISA 50X50X6	222	1.93		1.37	588.46	
	Add 10% extra					145.65	
						1602.17	**Kg**
11.10	**Providing and laying C.C. pavement of mix M-25 with ready mixed concrete from batching plant. The ready mixed concrete shall be laid and finished with screed board vibrator , vacuum dewatering process and finally finished by floating, brooming with wire brush etc. complete as per specifications and directions of Engineer-incharge. (The panel shuttering work shall be paid for separately). (Note:- Cement content considered in this item is @ 330 kg/cum. Excess/less cement used as per design mix is payable/ recoverable separately).**						
		1				1.00	
						1.00	**Cum**
11.11	**Providing and filling in position, blown bitumen in expansion joints.**						
	Sport flooring	1	0.67	0.01	0.05	0.00	
						0.00	**Cum**

ESTIMATE

OF PLUMBING WORKS

THIS PAGE IS INTENTIONALLY LEFT BLANK

SUMMARY PLUMBING WORKS (PHASE -01)

S. No.	Description	Amount (Rs.)	
		DSR	MR
1.0	SEWERAGE SYSTEM		
2.0	STORM WATER DRAINAGE SYSTEM		
3.0	EXTERNAL WATER SUPPLY		
4.0	SOIL WASTE & VENT PIPES AND FITTINGS		
5.0	INTERNAL WATER SUPPLY		
6.0	SANITARY FIXTURES		
7.0	RAIN WATER PIPES AND FITTINGS		
8.0	TUBEWELL & TUBEWELL PUMPS		
9.0	PUMPING SYSTEM		
10.0	WATER TREATMENT SYSTEM		
11.0	SUCTION AND DELIVERY PIPES AND VALVES FOR WATER SUPPLY PUMPS		
	TOTAL		
	TOTAL OF PHE WORKS (MPWD SOR / DSR + MR ITEMS)		
NOTE :- ABOVE ESTIMATE INCLUDES INTERNAL OF HOSTEL BLOCK & EXTERNAL DEVELOPMENT OF ACADEMIC BLOCK PLOT & HOSTEL BLOCK PLOT.			

S. No.	Description	Unit	Qty		Total Qty	Rate in Figures (in Rs.) MPWD SOR & DSR	Rate in Figures (in Rs.) Non SOR & DSR	MPWD SOR & DSR Amount (in Rs.)	Non SOR & DSR / MR Amount (in Rs.)	MPWD SOR & DSR-2018 /ELCT. DSR-2018 & N.S.I
			Hostel Block	EXT.						
1.0	**SEWERAGE SYSTEM**									
1.1	Providing, laying and jointing glazed **stoneware pipes class SP-1** with stiff mixture of cement mortar in the proportion of 1:1 (1 cement : 1 fine sand) including testing of joints etc. complete :									19.1
a)	100 mm diameter	Metre	10		10.00		-		-	19.1.1
1.2	Providing and laying non-pressure **NP2 class (light duty**) R.C.C. pipes with collars jointed with stiff mixture of cement mortar in the proportion of 1:2 (1 cement : 2 fine sand) including testing of joints etc. complete :									19.6
a)	250mm dia RCC pipe	Metre	120		120.00		-		-	19.6.3
1.3	Providing and laying **cement concrete** 1:5:10 (1 cement : 5 coarse sand : 10 graded stone aggregate 40 mm nominal size) **up to haunches** of S.W. pipes including bed concrete as per standard design :									19.3
a)	100mm diameter S.W. / RCC pipe	Metre	10		10.00		-		-	19.3.1
b)	150mm diameter S.W. / RCC pipe	Metre			0.00		-		-	19.3.4
c)	250mm diameter S.W. / RCC pipe	Metre	120		120.00		-		-	19.3.4
1.4	Providing and fixing square-mouth S.W. gully trap class SP-1 complete with C.I. grating brick masonry chamber with water tight C.I. cover with frame of 300 x300 mm size (inside) the weight of cover to be not less than 4.50 kg and frame to be not less than 2.70 kg as per standard design:									19.4
	150 x 100mm size P-type									19.4.2
a)	With common burnt clay F.P.S. (non modular) bricks of class designation 7.5	Each	6		6.00		-		-	19.4.2.1
1.5	Constructing brick masonry manhole in cement mortar 1:4 (1 cement : 4 coarse sand) with R.C.C. top slab with 1:1.5:3 mix (1 cement : 1.5 coarse sand (zone- III) : 3 graded stone aggregate 20 mm nominal size), foundation concrete 1:4:8 mix (1 cement : 4 coarse sand (zone-III) : 8 graded stone aggregate 40 mm nominal size), inside plastering 12 mm thick with cement mortar 1:3 (1 cement : 3 coarse sand) finished with floating coat of neat cement and making channels in cement concrete 1:2:4 (1 cement : 2 coarse sand : 4 graded stone aggregate 20 mm nominal size) finished with a floating coat of neat cement complete as per standard design :									19.7
	Inside size **90x80 cm and 45 cm deep** including C.I. cover with frame (light duty) 455x610 mm internal dimensions, total weight of cover and frame to be not less than 38 kg (weight of cover 23 kg and weight of frame 15 kg) :									19.7.1
a)	With common burnt clay F.P.S. (non modular) bricks of class designation 7.5	Each	8		8.00		-		-	19.7.1.1
1.6	Extra for **depth** for manholes :									19.8
	Size 90 x 80 cm									19.8.1
a)	With common burnt clay F.P.S. (non modular) bricks of class designation 7.5	Metre	2		2.00		-		-	19.8.1.1
1.7	Constructing brick masonry circular type manhole 0.91 m internal dia at bottom and 0.56m dia at top in cement mortar 1:4 (1 cement : 4 coarse sand), inside cement plaster 12 mm thick with cement mortar 1:3 (1 cement : 3 coarse sand) finished with a floating coat of neat cement, foundation concrete 1:3:6 mix (1 cement : 3 coarse sand : 6 graded stone aggregate 40 mm nominal size), and making necessary channel in cement concrete 1:2:4 (1 cement : 2 coarse sand : 4 graded stone aggregate 20 mm nominal size) finished with a floating coat of neat cement, all complete as per standard design :									19.9

S. No.	Description	Unit	Qty		Total Qty	Rate in Figures (in Rs.) MPWD SOR & DSR	Rate in Figures (in Rs.) Non SOR & DSR	MPWD SOR & DSR Amount (in Rs.)	Non SOR & DSR / MR Amount (in Rs.)	MPWD SOR & DSR-2018 /ELCT. DSR-2018 & N.S.I
			Hostel Block	EXT.						
	0.91 m deep with S.F.R.C. cover and frame (heavy duty, HD-20 grade designation) 560 mm internal diameter conforming to I.S. 12592, total weight of cover and frame to be not less than 182 kg., fixed in cement concrete 1:2:4 (1 cement : 2 coarse sand : 4 graded stone aggregate 20 mm nominal size) including centering, shuttering all complete. (Excavation, foot rests and 12mm thick cement plaster at the external surface shall be paid for separately) :									19.9.1
a)	With common burnt clay F.P.S. (non modular) bricks of class designation 7.5	Each			0.00		-		-	19.9.1.1
1.8	**Extra depth** for circular type manhole 0.91m internal dia (at bottom) beyond 0.91 m to 1.67 m									19.10
a)	With common burnt clay F.P.S. (non modular) bricks of class designation 7.5	Metre			0.00		-		-	19.10.1
1.9	Providing orange colour safety foot rest of minimum 6 mm thick plastic encapsulated as per IS : 10910, on 12 mm dia steel bar conforming to IS: 1786, having minimum cross section as 23 mmx25 mm and over all minimum length 263 mm and width as 165 mm with minimum 112 mm space between protruded legs having 2 mm tread on top surface by ribbing or chequering besides necessary and adequate anchoring projections on tail length on 138 mm as per standard drawing and suitable to with stand the bend test and chemical resistance test as per specifications and having manufacture's permanent identification mark to be visible even after fixing, including fixing in manholes with 30x20x15 cm cement concrete block 1:3:6 (1 cement : 3 coarse sand : 6 graded stone aggregate 20 mm nominal size) complete as per design.	Each	12		12.00		-		-	19.16
1.10	Earth work in excavation by mechanical means (Hydraulic excavator)/manual means over areas (exceeding 30 cm in depth, 1.5 m in width as well as 10 sqm on plan) including getting out and disposal of excavated earth lead upto 50 m and lift upto 1.5 m, as directed by Engineer-in-charge.									2.6
a)	All kinds of soil	Cum	17		17.00		-		-	2.6.1
1.11	**Filling** available excavated earth (excluding rock) in trenches, plinth, sides of foundations etc. in layers not exceeding 20cm in depth, consolidating each deposited layer by ramming and watering, lead up to 50 m and lift upto 1.5 m.	Cum	3		3.00		-		-	2.25
1.12	Excavating trenches of required width for pipes, cables, etc including excavation for sockets, and dressing of sides, ramming of bottoms, depth upto 1.5 m, including getting out the excavated soil, and then returning the soil as required, in layers not exceeding 20 cm in depth, including consolidating each deposited layer by ramming, watering, etc. and disposing of surplus excavated soil as directed, within a lead of 50 m :									2.10
a)	All kind of soil									2.10.1
	Pipes, cables etc. exceeding 80 mm dia. but not exceeding 300 mm dia	Metre	130		130.00		-		-	2.10.1.2
	Making soak pit 2.5 m diameter 3.0 metre deep with 45 x 45 cm dry brick honey comb shaft with bricks and S.W. drain pipe 100 mm diameter, 1.8 m long complete as per standard design.									19.32
	With common burnt clay F.P.S. (non modular) bricks of class designation 7.5	each	2		2.00		-		-	19.32.1

S. No.	Description	Unit	Qty		Total Qty	Rate in Figures (in Rs.) MPWD SOR & DSR	Rate in Figures (in Rs.) Non SOR & DSR	MPWD SOR & DSR Amount (in Rs.)	Non SOR & DSR / MR Amount (in Rs.)	MPWD SOR & DSR-2018 /ELCT. DSR-2018 & N.S.I
			Hostel Block	EXT.						
1.13	Constructing of masonry Grease Trap with brick masonry in cement mortar 1:5 (1 cement: 5 fine sand) RCC top slab with 1:2:4 mix (1 cement: 2 coarse sand: 4 graded stone aggregate 20 mm nominal size), foundation concrete 1:4:8 mix (1 cement: 4 coarse sand: 8 graded stone aggregate 40 mm nominal size) including RCC Baffle walls, excavation and refilling inside plastering 12 mm thick with cement mortar 1:3 (1 cement: 3 coarse sand) finished with a floating coat of neat cement and making channels in cement concrete 1:2:4 (1 cement: 2 coarse sand: 4 graded stone aggregate 20 mm nominal size) complete with Two nos. CI light duty Manholes covers of size 600x600x600mm at top slab.									Based on DSR No. (4.1.8), (6.36.1), (13.9.1), (5.3) & (5.9.3)
a)	Size 2.5mx1.5mx1.5m deep	each			0.00		-		-	
	TOTAL OF SEWERAGE SYSTEM CARRIED OVER TO SUMMARY									

S. No.	Description	Unit	Qty		Total Qty	Rate in Figures (in Rs.) MPWD SOR & DSR	Rate in Figures (in Rs.) Non SOR & DSR	MPWD SOR & DSR Amount (in Rs.)	Non SOR & DSR / MR Amount (in Rs.)	MPWD SOR & DSR-2018 /ELCT. DSR-2018 & N.S.I
			Hostel Block	EXT.						
2.0	**STORM WATER DRAINAGE SYSTEM**									
2.1	Providing and laying **cement concrete** 1:5:10 (1 cement : 5 coarse sand : 10 graded stone aggregate 40 mm nominal size) **up to haunches** of S.W. pipes including bed concrete as per standard design :									19.3
a)	150mm diameter S.W. / RCC pipe	Metre	20		20.00		-		-	19.3.2
b)	250mm diameter S.W. / RCC pipe	Metre	50		50.00		-		-	19.3.4
c)	300mm diameter S.W. / RCC pipe	Metre	70		70.00		-		-	19.3.5
d)	450mm diameter S.W. / RCC pipe	Metre	20		20.00		-		-	Derived from DSR Item No. 19.3.5
2.2	Providing and laying non-pressure **NP2 class** (light duty) **R.C.C. pipes** with collars jointed with stiff mixture of cement mortar in the proportion of 1:2 (1 cement : 2 fine sand) including testing of joints etc. complete :									19.6
a)	150mm dia RCC pipe	Metre	20		20.00		-		-	19.6.2
b)	250mm dia RCC pipe	Metre	50		50.00		-		-	19.6.3
c)	300mm dia RCC pipe	Metre	70		70.00		-		-	19.6.4
d)	450mm dia RCC pipe	Metre	20		20.00		-		-	19.6.5
2.3	Constructing brick **masonry road gully chamber 50x45x60cm** with bricks in cement mortar 1:4 (1 cement : 4 coarse sand) including 500x450mm precast RCC horizontal grating with frame complete as per standard design.									19.27
a)	With common burnt clay F.P.S. (non modular) bricks of class designation 7.5	Each	15		15.00		-		-	19.27.1
2.4	**Extra for depth** beyond 45 cm of brick masonry chamber :									19.31
	For 455x610 mm size									19.31.1
	With common burnt clay F.P.S. (non modular) bricks of class designation 7.5	Metre	2		2.00		-		-	19.31.1.1
2.5	Constructing brick masonry circular type manhole 0.91 m internal dia at bottom and 0.56m dia at top in cement mortar 1:4 (1 cement : 4 coarse sand), inside cement plaster 12 mm thick with cement mortar 1:3 (1 cement : 3 coarse sand) finished with a floating coat of neat cement, foundation concrete 1:3:6 mix (1 cement : 3 coarse sand : 6 graded stone aggregate 40 mm nominal size), and making necessary channel in cement concrete 1:2:4 (1 cement : 2 coarse sand : 4 graded stone aggregate 20 mm nominal size) finished with a floating coat of neat cement, all complete as per standard design :									19.9
	0.91 m deep with S.F.R.C. cover and frame (heavy duty, HD-20 grade designation) 560 mm internal diameter conforming to I.S. 12592, total weight of cover and frame to be not less than 182 kg., fixed in cement concrete 1:2:4 (1 cement : 2 coarse sand : 4 graded stone aggregate 20 mm nominal size) including centering, shuttering all complete. (Excavation, foot rests and 12mm thick cement plaster at the external surface shall be paid for separately) :									19.9.1
a)	With common burnt clay F.P.S. (non modular) bricks of class designation 7.5	Each	2		2.00		-		-	19.9.1.1
2.6	**Extra depth** for circular type manhole 0.91m internal dia (at bottom) beyond 0.91 m to 1.67 m									19.10
a)	With common burnt clay F.P.S. (non modular) bricks of class designation 7.5	Metre	1		1.00		-		-	19.10.1

S. No.	Description	Unit	Qty		Total Qty	Rate in Figures (in Rs.) MPWD SOR & DSR	Rate in Figures (in Rs.) Non SOR & DSR	MPWD SOR & DSR Amount (in Rs.)	Non SOR & DSR / MR Amount (in Rs.)	MPWD SOR & DSR-2018 /ELCT. DSR-2018 & N.S.I
			Hostel Block	EXT.						
2.7	Providing orange colour safety foot rest of minimum 6 mm thick plastic encapsulated as per IS : 10910, on 12 mm dia steel bar conforming to IS: 1786, having minimum cross section as 23 mmx25 mm and over all minimum length 263 mm and width as 165 mm with minimum 112 mm space between protruded legs having 2 mm tread on top surface by ribbing or chequering besides necessary and adequate anchoring projections on tail length on 138 mm as per standard drawing and suitable to with stand the bend test and chemical resistance test as per specifications and having manufacture's permanent identification mark to be visible even after fixing, including fixing in manholes with 30x20x15 cm cement concrete block 1:3:6 (1 cement : 3 coarse sand : 6 graded stone aggregate 20 mm nominal size) complete as per design.	Each	6		6.00		-		-	19.16
2.8	Earth work in excavation by mechanical means (Hydraulic excavator)/manual means over areas (exceeding 30 cm in depth, 1.5 m in width as well as 10 sqm on plan) including getting out and disposal of excavated earth lead upto 50 m and lift upto 1.5 m, as directed by Engineer-in-charge.									2.6
a)	All kinds of soil	Cum	7		7.00		-		-	2.6.1
2.9	**Filling** available excavated earth (excluding rock) in trenches, plinth, sides of foundations etc. in layers not exceeding 20cm in depth, consolidating each deposited layer by ramming and watering, lead up to 50 m and lift upto 1.5 m.	Cum	1		1.00		-		-	2.25
2.10	Excavating trenches of required width for pipes, cables, etc including excavation for sockets, and dressing of sides, ramming of bottoms, depth upto 1.5 m, including getting out the excavated soil, and then returning the soil as required, in layers not exceeding 20 cm in depth, including consolidating each deposited layer by ramming, watering, etc. and disposing of surplus excavated soil as directed, within a lead of 50 m :									2.10
a)	All kind of soil									2.10.1
	Pipes, cables etc. exceeding 80 mm dia. but not exceeding 300 mm dia	Metre	160		160.00		-		-	2.10.1.2
b)	Pipes, cables etc. exceeding 300 mm dia. but not exceeding 600 mm dia.	Metre	15		15.00		-		-	2.10.1.3
	TOTAL OF STORM WATER DRAINAGE SYSTEM CARRIED OVER TO SUMMARY									

S. No.	Description	Unit	Qty		Total Qty	Rate in Figures (in Rs.) MPWD SOR & DSR	Rate in Figures (in Rs.) Non SOR & DSR	MPWD SOR & DSR Amount (in Rs.)	Non SOR & DSR / MR Amount (in Rs.)	MPWD SOR & DSR-2018 /ELCT. DSR-2018 & N.S.I
			Hostel Block	EXT.						
3.0	**EXTERNAL WATER SUPPLY**									
3.1	Supplying fitting and fixing CPVC Pipes with all necessary fittings of SUPREME/ PRINCE/ SFMC/ FUSION brand or equivalent, in exposed or in trenches including trenching and refilling the same etc. complete as directed									38.9
	32mm diameter	Rm			0.00		-		-	
	40mm diameter	Rm			0.00		-		-	
	50mm diameter	Rm	65		65.00		-		-	
	63mm diameter	Rm	50		50.00		-		-	
	75mm diameter	Rm	35		35.00		-		-	
II	**PIPING**									
3.2	Supplying fitting and fixing UPVC Pipes with all necessary fittings (Using uPVC high pressure pipes & fittings of SUPREME/ PRINCE/ SFMC/ FUSION brand or quivalent) in exposed or in trenches including trenching and refilling the same etc. omplete as directed									38.8
	25mm diameter	Rm	25		25.00		-		-	
	32mm diameter	Rm	20		20.00		-		-	
	63mm diameter	Rm	620		620.00		-		-	
XXIX	**MANHOLE COVER**									
3.3	Providing fitting and fixing 450mm dia. 90mm thick C.I. Man hole cover and frame of 38 Kg. weight complete as directed and specified (For Underground Tank)	Each	6		6.00		-		-	34.46
3.4	Constructing masonry Chamber 30x30x50 cm inside, in brick work in cement mortar 1:4 (1 cement :4 coarse sand) for stop cock, with C. I. surface box 100x100 x75 mm (inside) with hinged cover fixed in cement concrete slab 1:2:4 mix (1 cement : 2 coarse sand : 4 graded stone aggregate 20 mm nominal size), i/c necessary excavation, foundation concrete 1:5:10 (1 cement : 5 fine sand : 10 graded stone aggregate 40mm nominal size) and inside plastering with cement mortar 1:3 (1 cement : 3 coarse sand) 12mm thick, finished with a floating coat of neat cement complete as per standard design :									18.32
a)	With common burnt clay F.P.S.(non modular) bricks of class designation 7.5	Each	14		14.00		-		-	18.32.1
3.5	Constructing masonry Chamber 60x60x75 cm inside, in brick work in cement mortar 1:4 (1 cement : 4 coarse sand) for sluice valve, with C.I. surface box 100mm top diameter, 160 mm bottom diameter and 180 mm deep (inside) with chained lid and RCC top slab 1:2:4 mix (1 cement : 2 coarse sand : 4 graded stone aggregate 20mm nominal size) , i/c necessary excavation, foundation concrete 1:5:10 (1 cement : 5 fine sand : 10 graded stone aggregate 40 mm nominal size) and inside plastering with cement mortar 1:3 (1 cement : 3 coarse sand) 12 mm thick, finished with a floating coat of neat cement complete as per standard design :									18.33
a)	With common burnt clay F.P.S.(non modular) bricks of class designation 7.5	Each	6		6.00		-		-	18.33.1

S. No.	Description	Unit	Qty		Total Qty	Rate in Figures (in Rs.) MPWD SOR & DSR	Rate in Figures (in Rs.) Non SOR & DSR	MPWD SOR & DSR Amount (in Rs.)	Non SOR & DSR / MR Amount (in Rs.)	MPWD SOR & DSR-2018 /ELCT. DSR-2018 & N.S.I
			Hostel Block	EXT.						
3.6	Supplying, fixing, testing and commissioning of following valves, strainers, gauges in the chilled water plumbing duly insulated to the same specifications as the connected piping and adequately supported as per specifications.									16.7
3.6.1	**BUTTERFLY VALVE** (MANUAL) with C I body SS Disc, Nitrile Rubber Seal & O- Ring PN 16 pressure rating for chilled water/hot eater circulation as specified									16.7.1
a)	80 mm dia	Each	1		1.00		-		-	ELECT. DSR 2018 / 16.7.1.5
3.7	Providing, fixing, testing & commissioning of lever operated gun metal **ball valve** with SS ball.									
a)	25mm nominal bore	Each	13		13.00	-		-		MR
b)	32mm nominal bore	Each			0.00	-		-		MR
c)	50mm nominal bore	Each	1		1.00	-		-		MR
d)	65mm nominal bore	Each	5		5.00	-		-		MR
3.8	Excavating trenches of required width for pipes, cables, etc including excavation for sockets, and dressing of sides, ramming of bottoms, depth upto 1.5 m, including getting out the excavated soil, and then returning the soil as required, in layers not exceeding 20 cm in depth, including consolidating each deposited layer by ramming, watering, etc. and disposing of surplus excavated soil as directed, within a lead of 50 m :									2.10
a)	All kind of soil									2.10.1
	Pipes, cables etc. exceeding 80 mm dia. but not exceeding 300 mm dia	Metre	770		770.00		-		-	2.10.1.2
3.9	Providing & fixing M.S. Puddle Flange fabricated of 600 mm long 'C' class pipe pieces with screwed ends with center of pipe welded with 6mm thick M.S. plate of size (100mm+D) X (100mm+D) for R.C.C. water tank walls / slabs. The entire fitting shall be hot dipped galvanised. (D indicated above nominal dia metre of pipe in mm).									
a)	25mm dia	Each		20	20.00	-		-		MR
b)	32mm dia	Each		12	12.00	-		-		MR
c)	40mm dia	Each		12	12.00	-		-		MR
d)	50mm dia	Each		30	30.00	-		-		MR
e)	65mm dia	Each		10	10.00	-		-		MR
f)	80mm dia	Each		20	20.00	-		-		MR
g)	100mm dia	Each		30	30.00	-		-		MR
h)	150mm dia	Each		20	20.00	-		-		MR
i)	200mm dia	Each		8	8.00	-		-		MR
j)	250mm dia	Each		10	10.00	-		-		MR
3.10	Providing, fixing, testing and commissioning of 100mm dia **G.I. Vent Pipe** on Under ground and over head tank inlcuding cost of 2 Nos. 90^0 bend and painting with enamel paint complete with in all respect.(100mm Dia)	Each	6		6.00	-		-		MR
	TOTAL OF EXTERNAL WATER SUPPLY CARRIED OVER TO SUMMARY									

S. No.	Description	Unit	Qty		Total Qty	Rate in Figures (in Rs.) MPWD SOR & DSR	Rate in Figures (in Rs.) Non SOR & DSR	MPWD SOR & DSR Amount (in Rs.)	Non SOR & DSR / MR Amount (in Rs.)	MPWD SOR & DSR-2018 /ELCT. DSR-2018 & N.S.I
			Hostel Block	EXT.						
4.0	**SOIL WASTE & VENT PIPES AND FITTINGS**									
XXIV	**PVC PIPES, BENDS, JUNCTIONS, TEES ETC.**									
4.1	Supplying, fitting and fixing PVC pipes/ bends/ Junctions etc. of Supreme/Prince or other ISI approved make, including joining ,fitting and fixing with clamps etc. as necessary complete at all levels including below G.L as directed and specified.									34.36
	PVC pipes of 6 Kg/cm2 as directed and specified.									34.36.1
(b)	110mm dia.	each	100		100.00		-		-	
(c)	75mm dia.	each	26		26.00		-		-	
4.2	87.5 degree **PVC bend** as directed and specified.									34.36.2
(b)	110mm dia.	each	122		122.00		-		-	
(c)	75mm dia.	each	52		52.00		-		-	
4.3	87.5 degree **PVC bend with door** as directed and specified.									34.36.3
(a)	In exposed surfaces or in trenches.									
(ii)	110mm dia.	each			0.00		-		-	
4.4	**PVC single tee with door** as directed and specified.									34.36.6
(a)	In exposed surfaces or in trenches.									
(ii)	110mm dia.	each	14		14.00		-		-	
4.5	**PVC single 'Y'** as directed and specified.									34.36.7
(a)	In exposed surfaces or in trenches.									
(ii)	110mm dia.	each	151		151.00		-		-	
(iv)	75mm dia.	each	29		29.00		-		-	
4.6	**PVC plain double 'Y'** as directed and specified.									34.36.9
(a)	In exposed surfaces or in trenches.									
(i)	110mm dia.	each	4		4.00		-		-	
4.7	**PVC coupler** as directed and specified.									34.36.13
(a)	In exposed surfaces or in trenches.									
(i)	110mm dia.	each	12		12.00		-		-	
(ii)	75 mm dia.	each	28		28.00		-		-	
4.8	**PVC reducing Tee** as directed and specified.									34.36.15
(a)	In exposed surfaces or in trenches.									
(iii)	110 mm x 75mm	each	27		27.00		-		-	
4.9	**PVC socket plug** in exposed surface or trenches as necessary complete at all levels including below G.L. as directed and specified.									34.36.17
(a)	110 mm	each	28		28.00		-		-	
(b)	75 mm	each					-		-	
4.10	PVC cleaning pipe in exposed surface or trenches as necessary complete at all levels including below G.L. as directed and specified.									34.36.18
(b)	110 mm	each	12		12.00		-		-	
(d)	75 mm	each			0.00		-		-	
4.11	Providing fitting and fixing PVC cowl of ISI make complete as directed and specified.									34.38
(b)	110mm dia. PVC cowl of ISI make	each	12		12.00		-		-	
(d)	75mm dia. PVC cowl of ISI make	each	28		28.00		-		-	
II	**PIPING**									
4.12	Supplying fitting and fixing UPVC Pipes with all necessary fittings (Using uPVC high pressure pipes & fittings of SUPREME/ PRINCE/ SFMC/ FUSION brand or quivalent) in exposed or in trenches including trenching and refilling the same etc. omplete as directed									38.8
	32mm diameter	Rm	60		60.00		-		-	
	50mm diameter	Rm	75		75.00		-		-	

S. No.	Description	Unit	Qty		Total Qty	Rate in Figures (in Rs.) MPWD SOR & DSR	Rate in Figures (in Rs.) Non SOR & DSR	MPWD SOR & DSR Amount (in Rs.)	Non SOR & DSR / MR Amount (in Rs.)	MPWD SOR & DSR-2018 /ELCT. DSR-2018 & N.S.I
			Hostel Block	EXT.						
4.13	Providing and laying in position **cement concrete** of specified grade excluding the cost of centering and shuttering - All work up to plinth level :									4.1
(a)	1:2:4 (1 cement : 2 coarse sand (zone-III) : 4 graded stone aggregate 20 mm nominal size)	Cum	7.64		7.64		-		-	4.1.3
4.14	Providing, fixing, testing and commissioning uPVC deep seal 'P' or 'S' Trap of self cleansing design with or without vent arm with provision for connecting uPVC inlet fitting complete including cost of cutting and making good the walls and floors wherever required.									
a)	For 110mm inlet and 110mm outlet.	each	101		101.00			-		NSI
	TOTAL OF SOIL WASTE & VENT PIPES AND FITTINGS CARRIED OVER TO SUMMARY									

S. No.	Description	Unit	Qty		Total Qty	Rate in Figures (in Rs.) MPWD SOR & DSR	Rate in Figures (in Rs.) Non SOR & DSR	MPWD SOR & DSR Amount (in Rs.)	Non SOR & DSR / MR Amount (in Rs.)	MPWD SOR & DSR-2018 /ELCT. DSR-2018 & N.S.I
			Hostel Block	EXT.						
5.0	**INTERNAL WATER SUPPLY**									
V	**CHLORINATED POLY VINYLE CLORIDE (CPVC) PIPES**									
5.1	Providing and fixing Chlorinated Polyvinyl Chloride (CPVC) Pipes, having thermal stability for hot and cold water supply including all CPVC plain and brass threaded fittings i/c fixing the pipe with clamps at 1.00m spacing. This includes jointing of pipes & fittings, with one step CPVC solvent cement and the cost of cutting chases and making good the same including testing of joints complete as per direction of Engineerin-Charge,.Concealed work, including cutting chases and making good the wall etc.									36.5
(a)	**Exposed** or in trenches									
(i)	15mm OD	R.m.			0.00		-		-	
(ii)	20mm pipe	R.m.			0.00		-		-	
(iii)	25mm OD	R.m.	140		140.00		-		-	
(iv)	32mm OD pipe	R.m.	10		10.00		-		-	
(v)	40 mm OD pipe	R.m.	45		45.00		-		-	
(vi)	50mm OD	R.m.	40		40.00		-		-	
(vii)	65mm OD	R.m.	105		105.00			-		MR
(viii)	80mm OD	R.m.	35		35.00			-		MR
(b)	**Concealed** by chiselling or breaking brick wall/ C.C. wall/ R.C.C. wall and making good to the damaged structure.									
(i)	15mm OD	R.m.	85		85.00		-		-	
(ii)	20mm pipe	R.m.	430		430.00		-		-	
(iii)	25mm OD	R.m.	45		45.00		-		-	
(iv)	32mm OD pipe	R.m.	35		35.00		-		-	
(v)	40 mm OD pipe	R.m.	15		15.00		-		-	
(vi)	50mm OD	R.m.	10		10.00		-		-	
II	**PIPING**									
5.2	Supplying fitting and fixing CPVC Pipes with all necessary fittings of SUPREME/ PRINCE/ SFMC/ FUSION brand or equivalent, in exposed or in trenches including trenching and refilling the same etc. complete as directed									38.9
(i)	50mm diameter	Rm			0.00		-	0.00	-	
(ii)	63mm diameter	Rm	5		5.00		-		-	
XXIX	**MANHOLE COVER**									
5.3	Providing fitting and fixing 450mm dia. 90mm thick C.I. Man hole cover and frame of 19 Kg. weight complete as directed and specified (For Over head Tank)	Each	4		4.00		-		-	34.48
5.4	Constructing masonry Chamber 30x30x50 cm inside, in brick work in cement mortar 1:4 (1 cement :4 coarse sand) for stop cock, with C. I. surface box 100x100 x75 mm (inside) with hinged cover fixed in cement concrete slab 1:2:4 mix (1 cement : 2 coarse sand : 4 graded stone aggregate 20 mm nominal size), i/c necessary excavation, foundation concrete 1:5:10 (1 cement : 5 fine sand : 10 graded stone aggregate 40mm nominal size) and inside plastering with cement mortar 1:3 (1 cement : 3 coarse sand) 12mm thick, finished with a floating coat of neat cement complete as per standard design :									18.32
a)	With common burnt clay F.P.S.(non modular) bricks of class designation 7.5	Each	1		1.00		-		-	18.32.1

S. No.	Description	Unit	Qty		Total Qty	Rate in Figures (in Rs.) MPWD SOR & DSR	Rate in Figures (in Rs.) Non SOR & DSR	MPWD SOR & DSR Amount (in Rs.)	Non SOR & DSR / MR Amount (in Rs.)	MPWD SOR & DSR-2018 /ELCT. DSR-2018 & N.S.I
			Hostel Block	EXT.						
5.5	Supplying, fixing, testing and commissioning of following valves, strainers, gauges in the chilled water plumbing duly insulated to the same specifications as the connected piping and adequately supported as per specifications.									16.7
5.5.1	**BUTTERFLY VALVE** (MANUAL) with C I body SS Disc, Nitrile Rubber Seal & O- Ring PN 16 pressure rating for chilled water/hot eater circulation as specified									16.7.1
a)	80 mm dia	Each			0.00		-		-	ELECT. DSR 2018 / 16.7.1.5
5.6	Providing and fixing ball valve (brass) of approved quality, High or low pressure, with plastic floats complete :									18.18
a)	50 mm nominal bore	Each			0.00	-		-		MR
b)	65 mm nominal bore	Each	1		1.00	-		-		MR
5.7	Providing, fixing, testing and commissioning of **Air Release Valves** screwed ends with ball valve of approved brand of manufacture, with accessories etc., complete.									
a)	15mm dia	Each	6		6.00	-		-		MR
5.8	Providing, fixing, testing & commissioning of **class-O Careflex ST insulation** 6mm thick to hot water pipe and fittings and valves as per manufacturer's recommendations complete to satisfaction of Engineer in charge.									
a)	15mm nominal bore (6 mm thick insulation)	Meter	30		30.00	-		-		MR
b)	20mm nominal bore (6 mm thick insulation)	Meter	200		200.00	-		-		MR
5.9	Providing, fixing, testing & commissioning of lever operated gun metal **ball valve** with SS ball.									
a)	20mm nominal bore	Each	52		52.00	-		-		MR
b)	25mm nominal bore	Each	1		1.00	-		-		MR
c)	32mm nominal bore	Each	2		2.00	-		-		MR
d)	40mm nominal bore	Each	6		6.00	-		-		MR
e)	50mm nominal bore	Each	6		6.00	-		-		MR
f)	65mm nominal bore	Each	1		1.00	-		-		MR
5.1O	Providing & fixing M.S. Puddle Flange fabricated of 600 mm long 'C' class pipe pieces with screwed ends with center of pipe welded with 6mm thick M.S. plate of size (100mm+D) X (100mm+D) for R.C.C. water tank walls / slabs. The entire fitting shall be hot dipped galvanised. (D indicated above nominal dia metre of pipe in mm).									
a)	25mm dia	Each		20	20.00	-		-		MR
b)	32mm dia	Each		12	12.00	-		-		MR
c)	40mm dia	Each		12	12.00	-		-		MR
d)	50mm dia	Each		30	30.00	-		-		MR
e)	65mm dia	Each		10	10.00	-		-		MR
f)	80mm dia	Each		20	20.00	-		-		MR
g)	100mm dia	Each		30	30.00	-		-		MR
h)	150mm dia	Each		20	20.00	-		-		MR
i)	200mm dia	Each		8	8.00	-		-		MR
j)	250mm dia	Each		10	10.00	-		-		MR
5.11	Providing, fixing, testing and commissioning of 100mm dia **G.I. Vent Pipe** on Under ground and over head tank inlcuding cost of 2 Nos. 90^0 bend and painting with enamel paint complete with in all respect.(100mm Dia)	Each	4	8	12.00	-		-		MR
	TOTAL OF INTERNAL WATER SUPPLY SYSTEM CARRIED OVER TO SUMMARY									

S. No.	Description	Unit	Qty		Total Qty	Rate in Figures (in Rs.) MPWD SOR & DSR	Rate in Figures (in Rs.) Non SOR & DSR	MPWD SOR & DSR Amount (in Rs.)	Non SOR & DSR / MR Amount (in Rs.)	MPWD SOR & DSR-2018 /ELCT. DSR-2018 & N.S.I
			Hostel Block	EXT.						
6.0	**SANITARY FIXTURES**									
II	**EUROPEAN TYPE WATER CLOSET**									
6.1	Providing fitting and fixing Vitreous china Dual Flush / Floor Mounted Coupled / Extended water closet (European type W.C pan 400mm high) with seat and lead, CP brass hinges and rubber buffers, CI/MS brackets, 40 mm dia flush band with fittings including painting of fittings and brackets, required. (Flushing Cistern to be paid separately)									34.4
(b)	White (Coupled).									
(ii)	Medium.	Each	44		44.00		-		-	
VI	**URINAL**									
6.2	Providing fitting and fixing vitreous china flat back type lipped front urinal basin of with automatic flushing cistern with standard flush pipe and CP brass spreader and brass unions, etc. complete including painting of fittings and brackets, cutting and making good the walls & floors wherever required.									34.8
(a)	White									
(ii)	Medium.	Each	10		10.00		-		-	
VIII	**DIVISION PLATE**									
6.3	Supplying fitting and fixing vitreous china division plate including fitting and fixing compete as directed and specified.									34.11
(a)	White									
(ii)	Medium.	Each	8		8.00		-		-	
IX	**WASH BASIN**									
6.4	Providing vitreous China wash basin with CI/MS brackets, C.P brass chain with plug, PVC waste pipe including painting of fittings and brackets, cutting and making good the walls wherever required. (Pillar cock, stop cocks, waste coupling are to be paid separately)									34.13
	Parryware Make (Counter Top Basin)									34.13.5
(a)	White									
(ii)	Medium.	Each	44		44.00		-		-	
XI	**KITCHEN SINK (STAINLESS STEEL)**									
6.5	Providing fitting & fixing stainless steel kitchen sink of Parryware make with CI/MS brackets, C.P. brass chain with rubber plug, PVC waste pipe etc. complete including painting the fittings, cutting &making good the walls wherever required. (Sink cock, stop cocks, waste									34.15
	coupling are to be paid separately									
(c)	Sink with drain board (37 in. x 18 in)	Each			0.00		-		-	
XIV	**MIRROR**									
6.6	Providing fitting and fixing Mirror with plastic frame of size 500x400mm complete as directed and specified.	Each	40		40.00		-		-	34.18
XVI	**SOAP TRAY, SOAP DISH, LIQUID SOAP DISPENSER AND LIQUID SOAP CONTAINER**									
6.7	Providing, fitting and fixing CP soap tray / soap dish complete as directed and specified.									34.22
(b)	Medium.	Each	44		44.00		-		-	
6.8	Providing, fitting and fixing Liquid soap dispenser and liquid soap container complete as directed and specified.									34.23
(b)	Medium.	Each	35		35.00		-		-	
XVII	**TOWEL RAIL, TOWEL RACK, TOWEL RING & ROBE HOOK**									
6.9	Providing, fitting and fixing CP towel rail complete as directed and specified.									34.24
(b)	Without Hook.									
(ii)	Medium.	Each	26		26.00		-		-	

S. No.	Description	Unit	Qty		Total Qty	Rate in Figures (in Rs.) MPWD SOR & DSR	Rate in Figures (in Rs.) Non SOR & DSR	MPWD SOR & DSR Amount (in Rs.)	Non SOR & DSR / MR Amount (in Rs.)	MPWD SOR & DSR-2018 /ELCT. DSR-2018 & N.S.I
			Hostel Block	EXT.						
6.10	Providing, fitting and fixing Chrome Plated towel ring complete as directed and specified.									34.26
(b)	Medium.	Each			0.00		-		-	
6.11	Providing, fitting and fixing Chrome Plated robe hook complete as directed and specified.									34.27
(b)	Medium.	Each	44		44.00		-		-	
XIX	**TOILET PAPER HOLDER**									
6.12	Providing, fitting and fixing Chrome Plated TOILET PAPER holder complete as directed and specified.									34.30
(b)	Medium.	Each	44		44.00		-		-	
XX	**WASTE COUPLING**									
6.13	Providing, fitting and fixing Chrome Plated waste coupling complete as directed and specified.	Each	44		44.00		-		-	34.31
XXI	**BOTTLE TRAP**									
6.14	Providing, fitting and fixing Chrome Plated bottle trap complete as directed and specified.	Each	44		44.00		-		-	34.32
6.15	Providing, fitting and fixing Chrome Plated bottle trap pipe complete as directed and specified.									34.33
(b)	Pipe for bottle trap 450mm long	Each	44		44.00		-		-	
VII	**BIB COCK**									
6.16	Supplying fitting and fixing C.P. bib cock 15mm dia of approved brand directed and specified (G.I. & C.P. pipes will be measured separately)									36.7
(b)	Long body bib cock with wall flange	Each	44		44.00		-		-	
VIII	**STOP COCK**									
6.17	Supplying fitting and fixing chrome plated (C.P.) stop-cock of approved brand and size as mentioned below as directed and specified.(G.I. & C.P pipes will be measured and paid separately)									36.9
(e)	15mm dia, Heavy (Concealed with adjustable wall flange)	Each	216		216.00		-		-	
IX	**PUSH BIB COCK**									
6.18	(Supplying fitting and fixing push bib cock 15mm dia complete as directed and specified as follows. (pipes will be measured and paid separately)									36.10
	C.P.C.H.									
(b)	Heavy quality	Each	21		21.00		-		-	
X	**PILLAR COCK**									
6.19	Supplying, fitting and fixing C.P. pillar cock 15mm dia as directed.									36.11
(b)	Medium.	Each	3		3.00		-		-	
XI	**SINK COCK**									
6.20	Supplying fitting and fixing Chrome Plated (C.P.) sink cock of approved brand as directed and specified. (G.I. & C.P pipes will be measured and paid separately)									
(b)	Medium.	Each			0.00		-		-	36.12
XIII	**SHOWER**									
6.21	Supplying fitting and fixing overhead adjustable Chrome Plated (C.P.) spray shower 15mm dia. of Sona make with wall flange as directed and specified.(pipes will be measured and paid separately)									36.14
(a)	Shower arm (Chrome Plated)									
(ii)	Medium	Each	44		44.00		-		-	
(b)	Overhead shower (Chrome Plated)									
(ii)	Medium	Each	44		44.00		-		-	

S. No.	Description	Unit	Qty		Total Qty	Rate in Figures (in Rs.) MPWD SOR & DSR	Rate in Figures (in Rs.) Non SOR & DSR	MPWD SOR & DSR Amount (in Rs.)	Non SOR & DSR / MR Amount (in Rs.)	MPWD SOR & DSR-2018 /ELCT. DSR-2018 & N.S.I
			Hostel Block	EXT.						
XIV	**HEALTH FAUCET**									
6.22	Supplying fitting and fixing Health faucet with 1m long flexible tube with wall flange as directed and specified.									36.15
(ii)	Medium	Each	44		44.00		-		-	
XV	**BASIN MIXER**									
6.23	Supplying, fitting and fixing Chrome Plated (C.P.) basin mixer complete as directed.									36.16
	Central hole									
(ii)	Medium	Each	26		26.00		-		-	
XVI	**WALL MIXER**									
6.24	Supplying, fitting and fixing Chrome Plated (C.P.) wall mixer complete as directed.									36.17
(a)	Non-Telephonic									
(ii)	Medium	Each	26		26.00		-		-	
XVII	**SINK MIXER**									
6.25	Supplying, fitting and fixing Chrome Plated (C.P.) sink mixer complete as directed.									36.18
(b)	Medium	Each			0.00		-		-	
6.26	Providing, fixing, testing & commissioning **S.S. hinged grating**, 1.5mm thick with frame equivalent to JAYNA NEW HEAVY GRATINGS Cat. No. NHG 140 including setting in floor with cement mortar 1:3.	Each	138		138.00			-		MR
6.27	Providing and fixing automatic high pressure **electric water heaters** equivalent to VENUS with glass lining thermostats with each element and high temperature cut off, necessary insulation, safety valve, etc. all complete.									
a)	25 litres	Each	26		26.00			-		MR
b)	50 litres	Each	3		3.00			-		MR
6.28	Providing and fixing **S.STEEL HAND DRYER (HEAVY TRAFFIC) EURONICS Cat No. EH 26 NW** fixed in position by means of C.P. screws and rawl plugs embedded in the walls complete including cutting and making good the walls wherever required.	Each			0.00			-		MR
	TOTAL OF SANITARY FIXTURES AND FITTINGS CARRIED OVER TO SUMMARY									

S. No.	Description	Unit	Qty		Total Qty	Rate in Figures (in Rs.) MPWD SOR & DSR	Rate in Figures (in Rs.) Non SOR & DSR	MPWD SOR & DSR Amount (in Rs.)	Non SOR & DSR / MR Amount (in Rs.)	MPWD SOR & DSR-2018 /ELCT. DSR-2018 & N.S.I
			Hostel Block	EXT.						
7.0	**RAIN WATER PIPES AND FITTINGS**									
7.1	Supplying, fitting and fixing PVC pipes/ bends/ Junctions etc. of Supreme/Prince or other ISI approved make, including joining ,fitting and fixing with clamps etc. as necessary complete at all levels including below G.L as directed and specified.									34.36
	PVC pipes of 6 Kg/cm2 as directed and specified.									34.36.1
(a)	160mm dia.	each			0.00		-		-	
(b)	110mm dia.	each	21		21.00		-		-	
(c)	75mm dia.	each	33		33.00		-		-	
7.2	87.5 degree **PVC bend** as directed and specified.									34.36.2
(a)	160mm dia.	each			0.00		-		-	
(b)	110mm dia.	each	8		8.00		-		-	
(c)	75mm dia.	each	15		15.00		-		-	
7.3	**PVC Plain single tee** as directed and specified.									34.36.5
(a)	In exposed surfaces or in trenches.									
(i)	160mm dia.	each			0.00		-		-	
(ii)	110mm dia.	each	8		8.00		-		-	
(iii)	75mm dia.	each	37		37.00		-		-	
7.4	Providing and fixing to the inlet mouth of rain water pipe **cast iron grating** 15 cm diameter and weighing not less than 440 grams.	Each	8		8.00		-		-	12.44
7.5	Providing and laying in position **cement concrete** of specified grade excluding the cost of centering and shuttering - All work up to plinth level :									4.1
(a)	1:2:4 (1 cement : 2 coarse sand (zone-III) : 4 graded stone aggregate 20 mm nominal size)	Cum	4.19		4.19		-		-	4.1.3
	TOTAL OF RAIN WATER PIPES AND FITTINGS CARRIED OVER TO SUMMARY									

S. No.	Description	Unit	Qty		Total Qty	Rate in Figures (in Rs.) MPWD SOR & DSR	Rate in Figures (in Rs.) Non SOR & DSR	MPWD SOR & DSR Amount (in Rs.)	Non SOR & DSR / MR Amount (in Rs.)	MPWD SOR & DSR-2018 /ELCT. DSR-2018 & N.S.I
			Hostel Block	EXT.						
8.0	**TUBEWELL & TUBEWELL PUMPS**									
	Note: The quantities may varies as per site conditions.									
8.1	Boring/drilling bore well of required dia for casing/ strainer pipe, by suitable method prescribed in IS: 2800 (part I), including collecting samples from different strata, preparing and submitting strata chart/ bore log, including hire & running charges of all equipments, tools, plants & machineries required for the job, all complete as per direction of Engineer-in-charge, upto 90 metre depth below ground level. (Quantity of depth of bore hole indicated in quantity is indicative. Exact depth will be ascertened as per water aquifer of site)									23.1
a)	Rocky strata including Boulders									23.1.2
	300 mm dia	M	60		60.00		-		-	23.1.2.1
8.2	Supplying, assembling, lowering and fixing in vertical position in bore well, ERW (Electric Resistance Welded) FE 410 mild steel screwed and socketed/plain ended casing pipes of required dia, conforming to IS: 4270, of reputed & approved make, including painted with outside surface with two coats of anticorrosive paint of approved brand and manufacture, including required hire & labour charges, fittings & accessories, all complete, for all depths, as per direction of Engineer-in-charge.. (Quantity of pipes of indicated in quanty is indicative. Exact depth will be ascertened as per water aquifer of site)									23.10
a)	150 mm nominal size dia having minimum wall thickness 5.00 mm	M	30		30.00		-		-	23.10.2
8.3	Supplying, assembling, lowering and fixing in vertical position in bore well, ERW (Electric Resistance Welded) FE 410 plain slotted (having slot of size 1.6/3.2 mm) mild steel threaded and socketed/ plain bevel ended pipe (type A) of required dia, conforming to IS: 8110, of reputed and approved make, having wall thickness not less than 5.40 mm, including painted with outside surface with two coats of anticorrosive bitumestic paint of approved brand and manufacture, including hire & labour charges, fittings & accessories, all complete, for all depths, as per direction of Engineer -in-charge. (Quantity of pipes of indicated in quanty is indicative. Exact depth will be ascertened as per water aquifer of site)									23.11
a)	150 mm nominal size dia	M	30		30.00		-		-	23.11.2
8.4	Providing and fixing M.S. clamp of required dia to the top of casing/ housing pipe of tubewell as per IS: 2800 (part I), including necessary bolts & nuts of required size complete.									23.14
a)	150 mm clamp.	Each	1		1.00		-		-	23.14.2
8.5	Development of tube well in accordance with IS : 2800 (part I) and IS: 11189, to establish maximum rate of usable water yield without sand content (beyond permissible limit), with required capacity air compressor, running the compressor for required time till well is fully developed, measuring yield of well by "V" notch method or any other approved method, measuring static level & draw down etc. by step draw down method, collecting water samples & getting tested in approved laboratory, i/c disinfection of tubewell, all complete, including hire & labour charges of air compressor, tools & accessories etc., all as per requirement and direction of Engineer-in-charge. (Quantity given is indicated in quantity is indicative. Exact time of development quality of water aquifer of site)	Hrs.	40		40.00		-		-	23.12

S. No.	Description	Unit	Qty		Total Qty	Rate in Figures (in Rs.) MPWD SOR & DSR	Rate in Figures (in Rs.) Non SOR & DSR	MPWD SOR & DSR Amount (in Rs.)	Non SOR & DSR / MR Amount (in Rs.)	MPWD SOR & DSR-2018 /ELCT. DSR-2018 & N.S.I
			Hostel Block	EXT.						
8.6	Providing and fixing single / multistage submersible tubewell pump suitable for 150mm bore with stainless steel casing, NORYL impeller, stainless steel shaft and built in non return valve coupled with submersible squirrel cage motors suitable for 145V ± 10% volts. 3 phase, 50 cycles AC supply.									
a)	Capacity 250 lpm									MR
	Head 50m to 60m	No.	1		1.00			-		
	Head may vary depdending upon depth of auqafire of site. The agency to quote accordingly									
8.7	65mm dia GI column pipe of heavy class duly flanged.	mtr.	75		75.00			-		MR
8.8	Providing and fixing gunmetal pressure gauge (100mm dia) of rating (0-10 kg/cm^2) with gunmetal isolating cock and connecting pipe.	No.	1		1.00			-		MR
8.9	Providing and fixing 65mm cable clips with nuts & bolts.	Nos.	24		24.00			-		MR
8.10	Providing and fixing 65mm dia supporting clamps with nuts and bolts.	Pair	1		1.00			-		MR
8.11	Providing and fixing 3C - 6 sq.m submersible cable. (Quantity of cable may vary depding upon the the depth of water aquafire at site.)	M	100		100.00			-		MR
8.12	Providing and fixing Butterfly valve of cast body with stainless steel disc and stainless steel stem, teflon bushing and niterite o'rings.									
a)	65mm dia	No.	1		1.00			-		MR
8.13	Providing and fixing steel wire rope 6mm dia complete with wire rope clamps for safety of pump set.	M	75		75.00			-		MR
8.14	Supplying & laying 1.1KV grade aluminium conductor PVC insulated and PVC sheathed armoured cables including 8 SWG GI earth wire on surface/cable trays as required.									
a)	3 Core - 6sq.mm	M	10		10.00			-		MR
8.15	Providing, installation, testing & commissioning of dust and vermin proof motor control panel fabricated from 14 SWG MS sheet with stove enamelled paint and comprising of: Outdoor type.									
a)	63 amps incoming MCB (1 No.)									
b)	One no fully automatic Dol starter with push buttons and indicating lights.5.5 KWs									
c)	One panel type volt meter 96mm square with Rotary selection switch for reading voltage between phase and neutral or incoming feeder.									
d)	Three Neon Phase indicating lights on the incoming Main.									
e)	One Ampere meter 96mm square panel type of appropriate range.									
f)	Etched plastic identification plates for all switch gears.									
g)	Space for liquid level controller.									
h)	All internal wiring should be colour coded from incoming main to switchgear, starters, meters, indicating lights.	No.	1		1.00			-		MR
8.16	Supplying of 150mm dia tail plug with all required specials complete as per directions of Engineer -in-Charge.									23.15
a)	150 mm clamp.	No.	1		1.00		-		-	23.15.2
	TOTAL OF TUBEWELL & TUBEWELL PUMPS CARRIED OVER TO SUMMARY									

S. No.	Description	Unit	Qty		Total Qty	Rate in Figures (in Rs.) MPWD SOR & DSR	Rate in Figures (in Rs.) Non SOR & DSR	MPWD SOR & DSR Amount (in Rs.)	Non SOR & DSR / MR Amount (in Rs.)	MPWD SOR & DSR-2018 /ELCT. DSR-2018 & N.S.I
			Hostel Block	EXT.						
9.0	**PUMPING SYSTEM**									
9.1	Providing, fixing, testing and commissioning of Vertical in line type pump set with SS casing, SS impeller and SS shaft suitable for operation on 400/440 volts, 3 phase 2900 RPM, TEFC electric motor mounted on a common channel base plate with coupling guard, 150mm dia pressure gauge, GM isolation cock and cement concrete foundation with plaster complete as required.									
a)	Filter Feed pumps for Academic Block									
	Pump capacity - 50 lpm									
	Head - 20 m									
	RPM - 2900	Each			0			-		MR
b)	Filter Feed pumps for Hostel block									
	Pump capacity - 100 lpm									
	Head - 20 m									
	RPM - 2900	Each	2		2			-		MR
c)	Domestic water transfer pumps for Academic Block									
	Pump capacity - 100 lpm									
	Head - 35 m									
	RPM - 2900	Each			0			-		MR
d)	Domestic water transfer pumps for Hostel block									
	Pump capacity - 200 lpm									
	Head - 30 m									
	RPM - 2900	Each	2		2			-		MR
e)	Rain water transfer pumps for Academic Block									
	Pump capacity - 50 lpm									
	Head - 20 m									
	RPM - 2900	Each			0			-		MR
f)	Rain water transfer pumps for Hostel block									
	Pump capacity - 100 lpm									
	Head - 20 m									
	RPM - 2900	Each	2		2			-		MR
9.2	Providing, fixing, testing and commissioning of submersible single stage centrifugal mono block water supply pumping set with S.S volute and SS impeller complete with suitable motor. Motor to be suitable for 400 / 440 volts 3 phase, 50 cycles, AC supply.(Academic Block)									
	Capacity 100 lpm & Head 25m (At site)	Each			0			-		MR
9.3	Providing, fixing, testing and commissioning non clog type stainless Steel mono block submersible drainage pumps suitable for handling solids of 12 mm size with totally water and dust proof motor.(Academic Block & Hostel block)									
	Capacity 100 lpm & Head 10m (In pumprooms)	Each	2		2			-		MR

S. No.	Description	Unit	Qty		Total Qty	Rate in Figures (in Rs.) MPWD SOR & DSR	Rate in Figures (in Rs.) Non SOR & DSR	MPWD SOR & DSR Amount (in Rs.)	Non SOR & DSR / MR Amount (in Rs.)	MPWD SOR & DSR-2018 /ELCT. DSR-2018 & N.S.I
			Hostel Block	EXT.						
9.4	Providing, fixing, testing and commissioning of Digital 5 Stage Water level Indicators/ controllers with low voltage Relays and Magnetic Analog Stainless Steel Probe operated by a single Float, including necessary wiring and conduiting from probes to display panel/motor control panels and to provide Audible Alarm for low level for each underground tank. (The cost of required cabling from probe to Display/ Control panel and from Display to Motor control panels to be paid separately).(Academic Block & Hostel block)									
a)	**For Domestic Filter feed pumps**									
	To start domestic filter feed pumps at low water level in domestic treated under ground tank and stop at high water level in domestic treated tank and stop at low water level in domestic raw water tank.	Set	1		1			-		MR
b)	**For Domestic water transfer pumps**									
	To start pump at low water level in overhead tank and stop at high water level in overhead tank and low water level in under ground tank.	Set	1		1			-		MR
9.5	Providing, fixing, testing and commissioning of dust, damp and vermin proof, free floor standing factory built sheet steel enclosed nondrawout modular panel for water supply pumps, fabricated out of suitable sized square tubular section and covered with 2.0mm thick CRCA sheet, hinged doors of 2mm thick CRCA sheet, duly painted complete with earth bus, necessary metering protections & indications and mounted with the following including all inter connection etc. (Including earthing).(Academic Block)									
a)	One No. 63 amps TP incoming MCB complete with the following:									
i)	1 No. 0-500 volts 96x96 sq. mm ammeter with selector switch and fuses. (1 set).									
ii)	1 No. 0-100 amps 96x96sq.mm ammeter with 60/5 amps ratio CT's and selector switch.									
iii)	Over voltage and under voltage tripping machanism for persistent voltage fluctations of more than ±10% of the rated voltage for more than 5 minutes. (1set)									
iv)	Phase indicating lamps with toggle switches.									
v)	Indication lamps for ON/OFF/TRIP status of motors.									
b)	Aluminium bus bar of 100 amps for three phase and neutral.									
c)	**Outgoing Feeders/Starters.**									
i)	16 amps TPN MCB with DOL starter each suitable 0.5 HP filter feed pumps (2 Nos).									
ii)	16 amps TPN MCB with DOL starter each suitable for 1.5 HP for domestic water supply (2 Nos).									
iii)	16 amps TPN MCB with DOL starter each suitable for 0.5 HP for rain water supply (2 Nos).									
iv)	16 amps TPN MCB with DOL starter each suitable for 1.5 HP for Submersible water supply (2 Nos).									
v)	16 amps TPN MCB each suitable for 0.75 HP drainage pumps panel in pumproom (1 Set).									
vi)	10 amps TPN MCB with selector swiitch for 60 Watt metering pump									
vii)	32 amps TPN MCB each suitable for 5 HP tubewell pumps panel (1 Sets).									
viii)	Rotary manual/auto/off switch. (8 Nos.)									
ix)	Spares									
a)	16 amps TPN MCB - 2 Nos.									
b)	32 amps TPN MCB - 2 Nos.									
x)	Note :									

S. No.	Description	Unit	Qty		Total Qty	Rate in Figures (in Rs.) MPWD SOR & DSR	Rate in Figures (in Rs.) Non SOR & DSR	MPWD SOR & DSR Amount (in Rs.)	Non SOR & DSR / MR Amount (in Rs.)	MPWD SOR & DSR-2018 /ELCT. DSR-2018 & N.S.I
			Hostel Block	EXT.						
a)	All switch gear/panels shall be suitable for 10 KA rating.									
b)	All outgoing will have 96 sq. mm size ammeter and CT.									
c)	All starter will have spare 10 amps 230 V coil auxiliary contractor for building Automation system.									
d)	All starter units for pumps to be provided with 3 level liquid level contractor.									
e)	Lamps.									
f)	All pumps to be provided with duty selector switch.									
g)	All pumps to be provided with sequence timer 220/440 V AC/DC and alternate working of pumps between 6 to 8 hours or alternate use of pumps after one service in sequence.									
h)	All pumps to be provided with over load relay.									
i)	All starter to be provided with single phase preventor.									
j)	Necessary cable alleys for space switches, level controller internal wiring and copper earthing of all equipment shall also be included. All switch gears/control gears shall be motor duty rating.	Each			0			-		MR
9.6	Providing, fixing, testing and commissioning of dust, damp and vermin proof, free floor standing factory built sheet steel enclosed nondrawout modular panel for water supply pumps, fabricated out of suitable sized square tubular section and covered with 2.0mm thick CRCA sheet, hinged doors of 2mm thick CRCA sheet, duly painted complete with earth bus, necessary metering protections & indications and mounted with the following including all inter connection etc. (Including earthing).(Hostel block)									
a)	One No. 63 amps TP incoming MCB complete with the following:									
i)	1 No. 0-500 volts 96x96 sq. mm ammeter with selector switch and fuses. (1 set).									
ii)	1 No. 0-100 amps 96x96sq.mm ammeter with 60/5 amps ratio CT's and selector switch.									
iii)	Over voltage and under voltage tripping machanism for persistent voltage fluctations of more than ±10% of the rated voltage for more than 5 minutes. (1set)									
iv)	Phase indicating lamps with toggle switches.									
v)	Indication lamps for ON/OFF/TRIP status of motors.									
b)	Aluminium bus bar of 100 amps for three phase and neutral.									
c)	**Outgoing Feeders/Starters.**									
i)	16 amps TPN MCB with DOL starter each suitable 1 HP filter feed pumps (2 Nos).									
ii)	16 amps TPN MCB with DOL starter each suitable for 4 HP for domestic water supply (2 Nos).									
iii)	16 amps TPN MCB with DOL starter each suitable for 1 HP for rain water supply (2 Nos).									
iv)	16 amps TPN MCB each suitable for 0.75 HP drainage pumps panel in pumproom (1 Set).									
v)	10 amps TPN MCB with selector swiitch for 60 Watt metering pump									
vi)	32 amps TPN MCB each suitable for 5 HP tubewell pumps panel (1 Sets).									
vii)	Rotary manual/auto/off switch. (6 Nos.)									
viil)	Spares									
a)	16 amps TPN MCB - 2 Nos.									
b)	32 amps TPN MCB - 2 Nos.									
x)	Note :									
a)	All switch gear/panels shall be suitable for 10 KA rating.									
b)	All outgoing will have 96 sq. mm size ammeter and CT.									

S. No.	Description	Unit	Qty		Total Qty	Rate in Figures (in Rs.) MPWD SOR & DSR	Rate in Figures (in Rs.) Non SOR & DSR	MPWD SOR & DSR Amount (in Rs.)	Non SOR & DSR / MR Amount (in Rs.)	MPWD SOR & DSR-2018 /ELCT. DSR-2018 & N.S.I
			Hostel Block	EXT.						
c)	All starter will have spare 10 amps 230 V coil auxiliary contractor for building Automation system.									
d)	All starter units for pumps to be provided with 3 level liquid level contractor.									
e)	Lamps.									
f)	All pumps to be provided with duty selector switch.									
g)	All pumps to be provided with sequence timer 220/440 V AC/DC and alternate working of pumps between 6 to 8 hours or alternate use of pumps after one service in sequence.									
h)	All pumps to be provided with over load relay.									
i)	All starter to be provided with single phase preventor.									
j)	Necessary cable alleys for space switches, level controller internal wiring and copper earthing of all equipment shall also be included. All switch gears/control gears shall be motor duty rating.	Each	1		1			-		MR
9.7	Providing, fixing, testing and commissioning of dust, damp and vermin proof, wall mounted factory built sheet steel enclosed nondrawout modular panel for water supply pumps, fabricated out of suitable sized square tubular section and covered with 2.0mm thick CRCA sheet, hinged doors of 2mm thick CRCA sheet, duly painted complete with earth bus, necessary metering protections & indications and mounted with the following including all inter connection etc. (Including earthing). (For drainage pumps in pump room).(Academic Block & Hostel block)									
a)	16 amps incoming MCB (1 No.)									
b)	Fully tapped Copper bus bas of suitable capacity. (1 set)									
c)	Panel type volt meter 96mm square with Rotary selection switch for reading voltage between phase and neutral or incoming feeder. (1 set)									
d)	Phase indicating lights with toggle switches and shall be protected by 2 amps MCB's. (2 sets)									
e)	Ampere meter 96mm square panel type of appropriate range. (1 set)									
f)	16 amps outgoing MCB (2 Nos.)									
g)	Fully automatic DOL starters with push buttons indicating lights and overload relay each for drainage pump. (2 Nos.)									
h)	Single phasing preventors. (2 Nos.)									
i)	Rotary manual/auto/off switch. (2 Nos.)									
j)	Space of one liquid level controller	Set	1		1			-		MR
9.8	Providing, laying, jointing, testing, & commissioning the PVC insulated & sheathed FRLS Armoured cables of 1.1 K.V. Aluminium Conductor including supplying and making and termination with brass compression glands:									
a)	3 Core x 4 sq.mm	Metre	250		250			-		MR
b)	4 Core x 4 sq.mm	Metre	15		15			-		MR
c)	4 Core x 6 sq.mm	Metre	10		10			-		MR
9.9	Providing, laying, jointing, testing, & commissioning 2 core x 1.5 sq mm copper conductor PVC sheathed armoured cable (For liquid level controllers from panel to underground / overhead tanks).	Metre	20		20			-		MR

S. No.	Description	Unit	Qty		Total Qty	Rate in Figures (in Rs.) MPWD SOR & DSR	Rate in Figures (in Rs.) Non SOR & DSR	MPWD SOR & DSR Amount (in Rs.)	Non SOR & DSR / MR Amount (in Rs.)	MPWD SOR & DSR-2018 /ELCT. DSR-2018 & N.S.I
			Hostel Block	EXT.						
9.10	Providing, laying, jointing, testing, & commissioning 6 core x 2.5 sq mm copper conductor PVC sheathed armoured cable (For digital 5 Stage liquidr level controllers from panel to underground / overhead tanks).	Metre	120		120			-		MR
9.11	Supplying and installing following size of perforated painted with powder coating M.S. cable trays with perforation not more than 17.5%, in convenient sections, joined with connectors, suspended from the ceiling with M.S. suspenders including bolts & nuts, painting suspenders etc as required.									
	150mm width x 50mm depth x 1.6 mm thickness.	Metre	30		30				-	ELECT. DSR 2018 /16.8
	TOTAL OF PUMPING SYSTEM CARRIED OVER TO SUMMARY									

S. No.	Description	Unit	Qty		Total Qty	Rate in Figures (in Rs.) MPWD SOR & DSR	Rate in Figures (in Rs.) Non SOR & DSR	MPWD SOR & DSR Amount (in Rs.)	Non SOR & DSR / MR Amount (in Rs.)	MPWD SOR & DSR-2018 /ELCT. DSR-2018 & N.S.I
			Hostel Block	EXT.						
10.0	**WATER TREATMENT SYSTEM**									
10.1	Providing, fixing, testing and commissioning skid mounted vertical MSRL Dual Media Pressure Filter fabricated from IS 226/2062 plate 5mm thick for shell and 6mm thick M.S. plate for dished ends complete with initial charge of filter media, face piping and valves accessories, painting, testing and commissioning complete.(Academic Block)									
	For Domestic water supply									
	Capacity 3000 lph.									
	Working pressure 2.5 kg./cm^2									
	Flow velocity: 10m^3/hr/m^2									
	Design pressure 4 kg./cm^2	Each			0			-		MR
10.2	Providing, fixing, testing and commissioning skid mounted vertical MSRL Activated carbon filter fabricated from IS 226/2062 plate 5mm thick for shell and 6mm thick M.S. plate for dished ends complete with initial charge of filter media, face piping and valves accessories, painting, testing and commissioning complete. (Academic Block)									
	For Domestic water supply									
	Capacity 3000 lph.									
	Working pressure 2.5 kg./cm^2									
	Flow velocity: 10m^3/hr/m^2									
	Design pressure 4 kg./cm^2	Each			0			-		MR
10.3	Providing, fixing, testing and commissioning skid mounted vertical MSRL Dual Media Pressure Filter fabricated from IS 226/2062 plate 5mm thick for shell and 6mm thick M.S. plate for dished ends complete with initial charge of filter media, face piping and valves accessories, painting, testing and commissioning complete.(Academic Block)									
	For Rain water supply									
	Capacity 3000 lph.									
	Working pressure 2.5 kg./cm^2									
	Flow velocity: 10m^3/hr/m^2									
	Design pressure 4 kg./cm^2	Each			0			-		MR
10.4	Providing, fixing, testing and commissioning skid mounted vertical MSRL Dual Media Pressure Filter fabricated from IS 226/2062 plate 5mm thick for shell and 6mm thick M.S. plate for dished ends complete with initial charge of filter media, face piping and valves accessories, painting, testing and commissioning complete.(Hostel block)									
	For Domestic water supply									
	Capacity 6000 lph.									
	Working pressure 2.5 kg./cm^2									
	Flow velocity: 10m^3/hr/m^2									
	Design pressure 4 kg./cm^2	Each	1		1			-		MR

S. No.	Description	Unit	Qty		Total Qty	Rate in Figures (in Rs.) MPWD SOR & DSR	Rate in Figures (in Rs.) Non SOR & DSR	MPWD SOR & DSR Amount (in Rs.)	Non SOR & DSR / MR Amount (in Rs.)	MPWD SOR & DSR-2018 /ELCT. DSR-2018 & N.S.I
			Hostel Block	EXT.						
10.5	Providing, fixing, testing and commissioning skid mounted vertical MSRL Activated carbon filter fabricated from IS 226/2062 plate 5mm thick for shell and 6mm thick M.S. plate for dished ends complete with initial charge of filter media, face piping and valves accessories, painting, testing and commissioning complete. (Hostel block)									
	For Domestic water supply									
	Capacity 6000 lph.									
	Working pressure 2.5 kg./cm^2									
	Flow velocity: 10m^3/hr/m^2									
	Design pressure 4 kg./cm^2	Each	1		1			-		MR
10.6	Providing, fixing, testing and commissioning skid mounted vertical MSRL Dual Media Pressure Filter fabricated from IS 226/2062 plate 5mm thick for shell and 6mm thick M.S. plate for dished ends complete with initial charge of filter media, face piping and valves accessories, painting, testing and commissioning complete.(Hostel block)									
	For Rain water supply									
	Capacity 6000 lph.									
	Working pressure 2.5 kg./cm^2									
	Flow velocity: 10m^3/hr/m^2									
	Design pressure 4 kg./cm^2	Each	1		1			-		MR
10.7	Providing, fixing, testing and commissioning Bulk Water Meter with direct reading dial in KL, all internal parts and strainer in gun metal/brass.									
a)	32mm dia (Academic Block)	Each			0			-		MR
b)	50mm dia (Hostel block)	Each	2		2			-		MR
10.8	Providing, fixing, testing and commissioning direct reading rate of flow Rota Meter									
a)	For 32 mm dia for 3000 lph rate of flow for filter. (Academic Block)	Each			0			-		MR
b)	For 50 mm dia for 6000 lph rate of flow for filter. (Hostel Block)	Each	2		2			-		MR
10.9	Providing and fixing in position the industrial type pressure gauges with gun metal / brass valves complete as required	Each	3		3		-		-	ELECT. DSR 2018 /16.8
10.10	Providing, fixing, testing and commissioning of chlorinator with metering pump mounted on HDPE white tank suitable for operation on 220 ± 5% single phase, 50 Hz AC supply, including cables from metering pump to control panel compete in all respects.	Each	1		1			-		MR
	TOTAL OF WATER TREATMENT SYSTEME SYSTEM CARRIED OVER TO SUMMARY									

S. No.	Description	Unit	Qty		Total Qty	Rate in Figures (in Rs.) MPWD SOR & DSR	Rate in Figures (in Rs.) Non SOR & DSR	MPWD SOR & DSR Amount (in Rs.)	Non SOR & DSR / MR Amount (in Rs.)	MPWD SOR & DSR-2018 /ELCT. DSR-2018 & N.S.I
			Hostel Block	EXT.						
11.0	**SUCTION AND DELIVERY PIPES AND VALVES FOR WATER SUPPLY PUMPS**									
11.1	Providing, fixing, testing and commissioning G.I. suction & delivery headers / pipes for water supply pumps (IS:1239 heavy class) jointed with G.I. heavy class welded flanged fittings (bends, tees, reducers, plugs, flange & blank flanges etc) and clamps all complete. Note: All pipes & fittings in pump room will be weldeded flanged types.									
a)	32 mm nominal bore	Meter			0			-		MR
b)	40 mm nominal bore	Meter			0			-		MR
c)	50 mm nominal bore	Meter	45		45			-		MR
d)	65 mm nominal bore	Meter	25		25			-		MR
e)	80 mm nominal bore	Meter	15		15			-		MR
f)	100 mm nominal bore	Meter	10		10			-		MR
11.2	Painting for G.I. Pipes with two or more coats of synthetic enamel paint of approved quality and shade over a coat of approved primer coat as directed including surface preparation (Shade as per pipe colour code).									
a)	32 mm nominal bore	Meter			0			-		MR
b)	40 mm nominal bore	Meter			0			-		MR
c)	50 mm nominal bore	Meter	45		45			-		MR
d)	65 mm nominal bore	Meter	25		25			-		MR
e)	80 mm nominal bore	Meter	15		15			-		MR
f)	100 mm nominal bore	Meter	10		10			-		MR
11.3	Providing, fixing, testing and commissioning lever operated gun metal Ball Valve with SS ball.									
	32 mm dia	Each			0			-		MR
11.4	Providing, fixing, testing and commissioning gunmetal horizontal Non-Return Valve with flanged ends tested to 20 kg/cm^2.									
a)	32mm dia	Each			0			-		MR
b)	50mm dia	Each	6		6			-		MR
11.5	Supplying, fixing, testing and commissioning of following valves, strainers, gauges in the chilled water plumbing duly insulated to the same specifications as the connected piping and adequately supported as per specifications.									ELECT. DSR 2018 /16.7
11.5.1	BUTTERFLY VALVE (MANUAL) with C I body SS Disc, Nitrile Rubber Seal & O- Ring PN 16 pressure rating for chilled water/hot eater circulation as specified									16.7.1
a)	100mm dia	Each	1		1		-		-	16.7.1.4
b)	80mm dia	Each	4		4		-		-	16.7.1.5
c)	65mm dia	Each	6		6		-		-	16.7.1.6
d)	50mm dia	Each	18		18		-		-	16.7.1.7
e)	40mm dia	Each			0		-		-	16.7.1.8
11.5.2	NON - RETURN VALVE with duel plate of C I body SS plates vulcanized NBR seal flanged end & PN 16 pressure rating for chilled / hot water circulation including insulation as specified.									16.7.3
a)	65mm dia	Each	2		2		-		-	16.7.3.6
11.5.3	Y - STRAINER of Ductile CI Body flanged ends with stainless steel strainer for chilled / hot water circulation including insulation as specified.									16.7.4
a)	80mm dia	Each	2		2		-		-	16.7.4.5
b)	65mm dia	Each	4		4		-		-	16.7.4.6
c)	40mm dia	Each			0		-		-	16.7.4.8
	TOTAL OF SUCTION AND DELIVERY PIPES AND VALVES FOR WATER SUPPLY PUMPS CARRIED OVER TO SUMMARY									

ESTIMATE

OF FIRE FIGHTING WORKS

THIS PAGE IS INTENTIONALLY LEFT BLANK

S. No.	Description	Amount (Rs.)	
		DSR	MR
1.0	FIRE FIGHTING PUMPS & EQUIPMENTS		
2.0	SUCTION AND DELIVERY PIPES AND VALVES FOR FIRE FIGHTING PUMPS		
3.0	FIRE HYDRANT SYSTEM		
4.0	FIRE EXTINGUISHER		
	TOTAL		
	TOTAL OF FIRE FIGHTING WORKS (MPWD SOR / DSR + MR ITEMS)		
NOTE :- ABOVE ESTIMATE INCLUDES INTERNAL OF HOSTEL BLOCK & EXTERNAL DEVELOPMENT OF ACADEMIC BLOCK PLOT & HOSTEL BLOCK PLOT.			

S. No.	Description	Unit	Qty			Total Qty	Rate in Figures (in Rs.) MPWD SOR & DSR	Rate in Figures (in Rs.) Non SOR & DSR	MPWD SOR & DSR Amount (in Rs.)	Non SOR & DSR / MR Amount (in Rs.)	MPWD SOR & DSR-2018 /ELCT. DSR-2018 & N.S.I
			Hostel Block	Academic Block	EXT.						
1.0	**FIRE FIGHTING PUMPS & EQUIPMENTS**										
1.1	Providing, fixing, testing and commissioning of electric driven **Hydrant Pump** suitable for automatic operation consisting of the following:										
a)	Horizontal end suction centrifugal pump complete with mechanical seal and including necessary arrangement for testing of pump										
b)	Squirrel cage induction motor suitable for 415 V, 50 Hz, AC supply of suitable rating for the above pump with synchronous speed of 2900 RPM T.E.F.C. type and conforming to IP:55 and flexible coupling and coupling guard with the pump.										
c)	Common bed plate of fabricated mild steel channel or cast iron type.										
d)	Suitable reinforced cement concrete pump foundation including cushy foot mounting, foundation bolts, washers as required.										
	S										
	Discharge - 2280 lpm										
	Head - 80 m										
	No. of stage preferred - Single										
	Speed RPM - 2900										
	Material of construction										
	a) Impeller - Bronze										
	b) Casing - C.I.										
	c) Shaft & Shaft Sleeve - SS-410										
	d) Bearing - Grease Lubicated										
	e) Seal & Make - Mechanical										
	Type of pump - End suction	Each		1		1					MR
1.2	Providing, fixing, testing and commissioning of electric driven **Jockey Pump** suitable for automatic operation consisting of the following:										
a)	Horizontally mounted centrifugal end suction pump complete with mechanical seal and including necessary arrangement for testing of pump.										
b)	Squirrel cage induction motor suitable for 415 V, 50 Hz, AC supply of suitable rating for the above pump with synchronous speed of 2900 RPM T.E.F.C. type and conforming to IP:55 and flexible coupling and coupling guard with the pump.										
c)	Common bed plate of fabricated mild steel channel or cast iron type.										
d)	Suitable reinforced cement concrete pump foundation including cushy foot mounting, foundation bolts, washers as required.										
	The pump shall be of the following specifications:										
	Discharge - 180 lpm										
	Head - 80 m										
	No. of stage preferred - Single										
	Speed RPM - 2900										
	Mover - Electric Motor Driven										
	Material of construction										
	a) Impeller - Bronze										
	b) Casing - C.I.										
	c) Shaft & Shaft Sleeve - SS-410										
	d) Bearing - Grease Lubicated										
	e) Seal & Make - Mechanical										
	Type of pump - End suction	Each		1		1			-		MR

S. No.	Description	Unit	Qty			Total Qty	Rate in Figures (in Rs.) MPWD SOR & DSR	Rate in Figures (in Rs.) Non SOR & DSR	MPWD SOR & DSR Amount (in Rs.)	Non SOR & DSR / MR Amount (in Rs.)	MPWD SOR & DSR-2018 /ELCT. DSR-2018 & N.S.I
			Hostel Block	Academic Block	EXT.						
1.3	Providing, fixing, testing and commissioning of diesel engine **Hydrant Pump** suitable for automatic operation consisting of the following:										
a)	Horizontal end suction centrifugal pump complete with mechanical seal and including necessary arrangement for testing of pump										
b)	Water coolled Diesel Engine developing suitable BHP at 1500 RPM for the Pump, common bed plate for mounting of engine and pump, RCC foundation and vibration damping arrangement by Cushy Foot and engine panel provided by engine manufacturer, connection to Engine Starting Panel as per item (4), sealed maintenance free batteries of 24 V, 88 AH. Rate shall include Exhaust pipe of required length with asbestos lagging, muffler, day oil tank of 400 lts with first charge and manual oil pump set.										
c)	Flexible coupling and coupling guard with the Pump,										
d)	Common bed plate of fabricated mild steel channel or cast iron type.										
e)	Suitable reinforced cement concrete pump foundation including cushy foot mounting, foundation bolts, washers as required.										
f)	Engine panel										
g)	Sealed maintenance free batteries of 24 V, 88 AH										
h)	Exhaust pipe of required length with asbestos lagging, muffler										
i)	Day oil tank of 400 lts with first charge and manual oil pump set.										
	The pump shall be of the following specifications:										
	Discharge - 2280 lpm										
	Head - 70 m										
	No. of stage preferred - Single										
	Speed RPM - 1850										
	Mover - Diesel engine driven										
	Material of construction										
	a) Impeller - Bronze										
	b) Casing - C.I.										
	c) Shaft & Shaft Sleeve - SS-410										
	d) Bearing - Grease Lubicated										
	e) Seal & Make - Mechanical										
	Type of pump - End Suction	Each		1		1					MR
1.4	Supplying and fixing air vessel made of 250 mm dia, 8 mm thick MS sheet, 1200 mm in height with air release valve on top and flanged connection to riser, drain arrangement with 25 mm dia gun metal wheel valve with required accessories, pressure gauge and paintingwith synthetic enamel paint of approved shade as required.	Set		1		1					FIRE DSR 2019 /20

S. No.	Description	Unit	Qty			Total Qty	Rate in Figures (in Rs.) MPWD SOR & DSR	Rate in Figures (in Rs.) Non SOR & DSR	MPWD SOR & DSR Amount (in Rs.)	Non SOR & DSR / MR Amount (in Rs.)	MPWD SOR & DSR-2018 /ELCT. DSR-2018 & N.S.I
			Hostel Block	Academic Block	EXT.						
1.5	Providing, fixing, testing and commissioning of non draw out Cubical type sectionalised floor standing powder coated switch board of 31 MVA fault capacity at 415 V +/- 10% complete with 4 strip, 300 A capacity Aluminium Bus - Bar Electrolytic grade, cable alley & supplying & fixing of following switchgears including connections & interconnections complete as required for1 No Hydrant pump, 1 No. Jockey Pump & 1 No. Engine Starting Panel for Diesel Pump.										
	Details of requirements given in specs.										
	CUBICAL FIRE PANEL BOARD										
	i) For 1 x 55 KW Fire hydrant pump (motor rating as per pump design)										
	ii) For 1 x 11 KW Jockey Pump (motor rating as per pump manufacturer design)										
	INCOMER										
	1 no. 250A TPN MCCB with Thermal Magnetic Release & ROH, with 96 mm (0 -1000 A) ammeter with 3 CT and selector switch, 96 mm (0 - 300 V) Voltmeter with selector switch, phase indication light with protection fuse-01 Set.										
	OUTGOINGS										
	i) For 1 x 55 KW Fire hydrant pump.										
	200 A TP MCCB with Star delta starter, overload relay start / stop push buttons, 96 mm (0-500 A) ammeter with three CT & selector switch, on / off / trip indication light with protection fuses, single phase preventer. - 1 Set										
	ii) For 1 x 11 KW Jockey Pump										
	63 A TP MCB, 25 A Star delta starter, overload relay, start/stop push buttons, ammeter (0-100A) with three CT & selector switch, on/off/trip indication lights with protection fuse, single phase preventer. - 1 Set										
	iii) 32A MCB for battery charging alongwith engine start relay 24V DC with AMF Panel - 01 set										
	iv) Provision for starting the diesel engine fire pump with battery charger for trickle & boost charging. The diesel engine driven fire pump shall start automatically in the event of pressure drop beyong preset limit on mains faulure or failure of electrical driven pumps to start.										
	Note:- CABEL CONNECTION										
	Separate neutral link to be provided wherever TP MCCB are used.										
	Following provisions to be made in the fire panel:										
	Audio visual alarm & indications having disconnect / reset facility with a range of 1/2 km. Annunciator to be provided in the Fire panel with hooter and acknowledge, test and reset P Bs. The indication shall come on when electrical driven pump set fails to start on pressure drop or when there is power failure during pressure drop.										
	Facility for mode selection ie auto or manual test & local/remote.										
	Protection failure & control cabling.										
	Panel shall be interlocked in such a way when fire pump starts on pressure drop in the header, supply to working chiller A/c panel is disconnected.										
	Remote indication of ON/OFF/TRIP shall be provided through potential free contact.										
	Provision of remote starting/stopping (manuals) of the engine shall be made.										

S. No.	Description	Unit	Qty			Total Qty	Rate in Figures (in Rs.) MPWD SOR & DSR	Rate in Figures (in Rs.) Non SOR & DSR	MPWD SOR & DSR Amount (in Rs.)	Non SOR & DSR / MR Amount (in Rs.)	MPWD SOR & DSR-2018 /ELCT. DSR-2018 & N.S.I
			Hostel Block	Academic Block	EXT.						
	NOTE :										
	All pumps operation shall be controled by flow switches.										
	The logic of control panel based on specification attached.										
	All pumps shall be works automatically or manually.										
	5 Amp power required for diesel engine pump from main fire fighting panel.										
	(panel starter shall be based on pumps motor rating if any changes in motor rating the starter rating shall change and fabrication shall start only after approval of drawing)	Each		1		1					MR
1.6	Providing, laying, jointing, testing, & commissioning the PVC insulated & sheathed FRLS (Flame Retardant Low Smoke) Armoured Cables of 1.1 K.V. Aluminium Conductor including supplying and making end termination with brass compression glands:										
a)	3 core x 6 sq.mm	Metre	15	45		60					MR
b)	3 core x 35 sq.mm	Metre		30		30					MR
1.7	Providing, fixing, testing and commissioning of electric driven booster pump suitable for automatic operation consisting of the following:										
	(a) Horizontal end suction centrifugal pump complete with mechanical seal and including necessary arrangement for testing of pump										
	(b) Squirrel cage induction motor suitable for 415 V, 50 Hz, AC supply of suitable rating for the above pump with synchronous speed of 2900 RPM T.E.F.C. type and conforming to IP:55 and flexible coupling and coupling guard with the pump.										
	(c)Common bed plate of fabricated mild steel channel or cast iron type.										
	(d)Suitable reinforced cement concrete pump foundation including cushy foot mounting, foundation bolts, washers as required.										
	The pump shall be of the following specifications:										
	Discharge - 450 lpm										
	Head - 35 m										
	No. of stage preferred - Single										
	Speed RPM - 2900										
	Material of construction										
	a) Impeller - Bronze										
	b) Casing - C.I.										
	c) Shaft & Shaft Sleeve - SS-410										
	d) Bearing - Grease Lubicated										
	e) Seal & Make - Mechanical										
	Type of pump - End suction	Each	1	1		2					MR

S. No.	Description	Unit	Qty			Total Qty	Rate in Figures (in Rs.) MPWD SOR & DSR	Rate in Figures (in Rs.) Non SOR & DSR	MPWD SOR & DSR Amount (in Rs.)	Non SOR & DSR / MR Amount (in Rs.)	MPWD SOR & DSR-2018 /ELCT. DSR-2018 & N.S.I
			Hostel Block	Academic Block	EXT.						
1.8	Providing, fixing, testing and commissioning of dust, damp and vermin proof, wall mounted factory built sheet steel enclosed nondrawout modular panel for water supply pumps, fabricated out of suitable sized square tubular section and covered with 2.0mm thick CRCA sheet, hinged doors of 2mm thick CRCA sheet, duly painted complete with earth bus, necessary metering protections & indications and mounted with the following including all inter connection etc (for Fire Booste pump).										
a)	32A TP MCB with DOL starter, overload relay, start/stop push buttons, ammeter (0-40A) with three CT & selector switch, on/off/trip indication lights with protection fuse, single phase preventer. - 01 Set										
b)	One panel type volt meter 96mm square with Rotary selection switch for reading voltage between phase and neutral or incoming feeder.										
c)	One Ampere meter 96mm square panel type of appropriate range.										
d)	Etched plastic identification plates for all switch gears.										
e)	Space for 32 ampere MCB.										
f)	All internal wiring should be colour coded from incoming main to switchgear, starters, meters, indicating lights.										
g)	Single phasing preventors. (1 No.)										
h)	Rotary manual/auto/off switch. (1 No.)	Each	1	1		2					MR
1.9	Providing & fixing of **pressure switch** in M.S. pipe line including connection etc. as required.	Each	1	4		5		-		-	FIRE DSR 2019 /22
	TOTAL OF PUMPING SYSTEM CARRIED OVER TO SUMMARY										

S. No.	Description	Unit	Qty			Total Qty	Rate in Figures (in Rs.) MPWD SOR & DSR	Rate in Figures (in Rs.) Non SOR & DSR	MPWD SOR & DSR Amount (in Rs.)	Non SOR & DSR / MR Amount (in Rs.)	MPWD SOR & DSR-2018 /ELCT. DSR-2018 & N.S.I
			Hostel Block	Academic Block	EXT.						
2.0	**SUCTION AND DELIVERY PIPES AND VALVES FOR FIRE FIGHTING PUMPS**										
2.1	Providing, laying, testing & commissioning of 'C' class heavy duty MS pipe conforming to IS 3589/IS 1239 including Welding, fittings like elbows, tees, flanges, tapers, nuts bolts, gaskets etc. and fixing the pipe on the wall/ceiling with suitable clamp/support frame and painting with two or more coats of synthetic enamel paintof required shade complete as required :										FIRE DSR 2019 /7
a)	50 mm dia	Metre		10		10		-		-	7.4
b)	65 mm dia	Metre		5		5		-		-	7.5
c)	80 mm dia	Metre		10		10		-		-	7.6
d)	100 mm dia	Metre		20		20		-		-	7.7
e)	150 mm dia	Metre		30		30		-		-	7.8
f)	200 mm dia (wall thickness 6.3 mm)	Metre		20		20		-		-	7.9
2.3	Providing, fixing, testing and commissioning fire retardent / extinguishing electrical insulated synthetic mat of 3mm thick ±10% conforming to latest BIS doc no.-ET-02(5440) meeting requirements of IS 3043 / IS 5216 (Part I, II & III), IS 8437 & IEC 479 suitable for all voltages not exceeding 3.3 KV AC supply and having minimum width of 1000mm ± 20mm and including supply of required quantity of adhsive / compound and fixing the same at site as per site requirement.	Metre		2.5		2.5	-		-		MR
2.4	Supplying and installing following size of perforated painted with powder coating M.S. cable trays with perforation not more than 17.5%, in convenient sections, joined with connectors, suspended from the ceiling with M.S. suspenders including bolts & nuts, painting suspenders etc as required.										ELECT. DSR 2018 /4.1
	150mm width x 50mm depth x 1.6 mm thickness.	Metre		25		25		-		-	4.1.2
2.5	Providing and fixing 25 mm X 5 mm G.I. strip in 40 mm dia G.I. pipe from earth electrode including connection with G.I. nut, bolt, spring, washer excavation and re-filling etc. as required.	Metre		10		10		-		-	ELECT. DSR 2018 / 5.11
2.6	Providing and fixing 25 mm X 5 mm G.I. strip on surface or in recess for connections etc. as required.	Metre		50		50		-		-	ELECT. DSR 2018 / 5.15
2.7	Earthing with G.I. earth plate 600 mm X 600 mm X 6 mm thick including accessories, and providing masonry enclosure with cover plate having locking arrangement and watering pipe of 2.7 metre long etc. with charcoal/ coke and salt as required.	Set		1		1		-		-	ELECT. DSR 2018 / 5.4
2.8	Providing and fixing in position the industrial type pressure gauges with gun metal / brass valves complete as required	Each	1	5		6		-		-	ELECT. DSR 2018 /16.8
2.9	Supplying, fixing, testing and commissioning of butterfly valve of PN 1.6 rating with bronze/gunmetal seat duly ISI marked complete with nuts, bolts, washers, gaskets conforming to IS 13095 of following sizes as required :										FIRE DSR 2019 /11
a)	200 mm dia	Each		2		2		-		-	11.7
b)	150 mm dia	Each		4		4		-		-	11.6
c)	100 mm dia	Each		3		3		-		-	11.5
d)	80 mm dia	Each		2		2		-		-	11.4
e)	65 mm dia	Each		1		1		-		-	11.3
f)	50 mm dia	Each		1		1		-		-	11.2
2.10	Providing, installation, testing and commissioning of non-return valve of following sizes confirming to IS: 5312 complete with rubber gasket, GI bolts, nuts, washers etc.as required :.										FIRE DSR 2019 /14
a)	150 mm dia	Each		2		2		-		-	14.7
b)	100 mm dia	Each		2		2		-		-	14.5
c)	65 mm dia	Each		1		1		-		-	14.3

S. No.	Description	Unit	Qty			Total Qty	Rate in Figures (in Rs.) MPWD SOR & DSR	Rate in Figures (in Rs.) Non SOR & DSR	MPWD SOR & DSR Amount (in Rs.)	Non SOR & DSR / MR Amount (in Rs.)	MPWD SOR & DSR-2018 /ELCT. DSR-2018 & N.S.I
			Hostel Block	Academic Block	EXT.						
2.11	Providing, installation, testing and commissioning of stainless steel Y-strainer fabricated out of 1.6 mm thick stainless steel, Grade 304, sheet with 3 mm dia holes with stainless steel flange.										FIRE DSR 2019 /15
a)	150 mm dia	Each		2		2		-		-	15.3
b)	80 mm dia	Each		1		1		-		-	15.1
2.12	Providing, fixing, testing and commissioning reinforced Neoprene **Flexible Pipe** connectors with all accessories on all pumps delivery.										
a)	Suitable for 20 Kg/cm^2										
(i)	100mm	Each		2		2	-		-		MR
(ii)	65mm	Each		1		1	-		-		MR
2.13	Providing, fixing, testing and commissioning of **FM approved Venturi type Flow meter** of approved brand of manufacture, with accessories etc., complete.										
	For 100mm dia	Each		1		1	-		-		MR
2.14	Providing, fixing, testing and commissioning of Pressure release valve. (FM/UL Listed)										
a)	100mm dia	Each		1		1	-		-		MR
b)	20mm dia	Each		2		2	-		-		MR
2.15	Providing, fixing, testing and commissioning of waste cone with site glasses.										
	100 x 200	Each		1		1	-		-		MR
	TOTAL OF SUCTION AND DELIVERY PIPES AND VALVES FOR FIRE FIGHTING PUMPS CARRIED OVER TO SUMMARY										

S. No.	Description	Unit	Qty			Total Qty	Rate in Figures (in Rs.) MPWD SOR & DSR	Rate in Figures (in Rs.) Non SOR & DSR	MPWD SOR & DSR Amount (in Rs.)	Non SOR & DSR / MR Amount (in Rs.)	MPWD SOR & DSR-2018 /ELCT. DSR-2018 & N.S.I
			Hostel Block	Academic Block	EXT.						
3.0	**FIRE HYDRANT SYSTEM**										
3.1	Providing laying, testing & commissioning of 'C' class heavy duty MS Pipe conforming to IS 1239/3589 i/c fittings like elbows, tees, flanges, tapers, nuts bolts, gaskets etc. in ground including welding, excavation & providing cement concrete blocks as supports, anticorrosive treatment with coaltar/asphalt tape as per IS 10221, refilling the trench etc. of following sizes complete as required.										FIRE DSR 2019 /6
(a)	150 mm dia pipe	m		370		370.00		-			6.2
(b)	100 mm dia pipe	m	15	70		85.00					MR
3.2	Providing, laying, testing & commissioning of 'C' class heavy duty MS pipe conforming to IS 3589/IS 1239 including Welding, fittings like elbows, tees, flanges, tapers, nuts bolts, gaskets etc. and fixing the pipe on the wall/ceiling with suitable clamp/support frame and painting with two or more coats of synthetic enamel paint of required shade complete as required :										FIRE DSR 2019 /7
(a)	25 mm dia pipe	m	10	10		20.00		-		-	7.1
(b)	80 mm dia pipe	m	10	10		20.00		-		-	7.6
(c)	100 mm dia pipe	m	100	190		290.00		-		-	7.7
(d)	150 mm dia pipe	m		15		15.00		-		-	7.8
3.3	Supplying and fixing **single headed internal hydrant valve** with instantaneous Gunmetal/Stainless Steel coupling of 63 mm dia with cast iron wheel ISI marked conforming to IS 5290 (Type -A) with blank Gunmetal/Stainless Steel cap and chain as required :										FIRE DSR 2019 /9
(a)	Single headed Gunmetal	Set	8	13		21.00		-		-	9.1
3.4	Supplying and fixing 63 mm dia, 15 m long **RRL hose pipe** with 63 mm dia male and female couplings duly bound with GI wire, rivets etc. conforming to IS 636 (type-A) as required :										FIRE DSR 2019 /16
(a)	Gun Metal	Set	12	18		30.00		-		-	16.1
3.5	Supplying and fixing **first-aid Hose Reel** with MS construction spray painted in post office red, conforming to IS 884 complete with the following as required.										FIRE DSR 2019 /17
	20 mm nominal internal dia water hose thermoplastic (Textile reinforced) type -2 as per IS: 12585										
	20 mm nominal internal dia gun metal globe valve & nozzle.										
	Drum and brackets for fixing the equipmets on wall.										
	Connections from riser with 25 mm dia stop gun metal valve & M.S. Pipe and socket.										
(a)	30 m	Set	6	9		15.00		-		-	17.1
3.6	Supplying & fixing 63 mm dia gun metal **short branch pipe** with 20 mm nominal internal diameter size nozzle conforming to IS 903 suitable for instantaneous connection to interconnect hose pipe coupling as required :										FIRE DSR 2019 /18
(a)	Gun metal	Nos.	6	9		15.00		-		-	18.1
3.7	Supplying, fixing, testing and commissioning of **butterfly valve of PN 1.6 rating** with bronze/gunmetal seat duly ISI marked complete with nuts, bolts, washers, gaskets conforming to IS 13095 of following sizes as required :										FIRE DSR 2019 /11
(a)	100 mm dia	Set	6	8		14.00		-		-	11.5
(b)	150 mm dia	Set		3		3.00		-		-	11.6
3.8	Providing, installation, testing and commissioning of **non-return valve** of following sizes confirming to IS: 5312 complete with rubber gasket, GI bolts, nuts, washers etc.as required :										FIRE DSR 2019 /14
(a)	100 mm dia	Set	2	3		5.00		-		-	14.5
(b)	150 mm dia	Set		1		1.00		-		-	14.7

S. No.	Description	Unit	Qty			Total Qty	Rate in Figures (in Rs.) MPWD SOR & DSR	Rate in Figures (in Rs.) Non SOR & DSR	MPWD SOR & DSR Amount (in Rs.)	Non SOR & DSR / MR Amount (in Rs.)	MPWD SOR & DSR-2018 /ELCT. DSR-2018 & N.S.I
			Hostel Block	Academic Block	EXT.						
3.9	Providing, fixing, testing & commissioning of **Drainage Provision** for the risers with necessary 40 mm dia pipe, ball valve etc as required. Maximum length of pipe shall be 10 M.	Each	2	5		7.00			-		MR
3.10	Providing, fixing, testing & commissioning of 25 mm dia screwed inlet forged brass **single acting air valves** connected with ball valve on inlet side at top of the Risers.	Each	2	4		6.00			-		MR
3.11	Providing and fixing in position the industrial type **Pressure Gauges** with gun metal / brass valves complete as required (For Hydrant & Pump room)	Each	6	9		15.00		-		-	ELEC. DSR 2018 / 16.8
3.12	Providing, fixing, testing & commissioning of door with frame for all internal fire hydrants fabricated from 18 gauge CRCA M.S. sheet double door including 2 nos allen key lock for locking along with padlock arrangement & fully glazed with 5 mm thick float glass approved by local Fire Authority, stove enameled fire red finish with " fire hose' written on front with radium strip suitable to house 15 mm long four length of canvas hose with couplings, one no of branch pipe, one fire mans axe and two numbers of portable extinguishers, first aid fire hose and supports for hoses, branch pipes, Axe and hose reel. as per approved design including necessary fixing arrangement for hoses & axe and branch pipe.).	Sq.m	12	18		30.00			-		MR
3.13	Providing, fixing, testing & commissioning of standard Fireman's **Axe** with heavy insulated rubber handle.	Each	6	9		15.00			-		MR
3.14	Supplying and fixing orifice plate made out of 6 mm thick stainless steel (Grade 304) with orifice of required size to be fitted between flange & landing valve of external and internal hydrants to reduce pressure at the outlet to the level of 3.5 kg/cm2 complete as required.	Each	2	5		7.00		-		-	FIRE DSR 2019 /13
3.15	Providing, fixing, testing & commissioning of **suction coupling** for fire brigade drawl of water from tank with 150 mm dia GI (Heavy class) pipe and foot valve (Pipe max 8 M long).	Each		1		1.00	-		-		MR
3.16	Supplying and fixing of **fire brigade connection of cast iron body** with gun metal male instantaneous inlet couplings complete with cap and chain as reqd. for suitable dia MS pipe connection conforming to IS 904 as required :										FIRE DSR 2019 /19
a)	2 way-100 mm dia M.S. Pipe	Each	1	1		2.00		-		-	19.1
b)	4 way - 150 mm dia M.S. Pipe	Each		1		1.00		-		-	19.2
	TOTAL OF FIRE HYDRANT & EXTINGUISHING SYSTEM CARRIED OVER TO SUMMARY										

S. No.	Description	Unit	Qty			Total Qty	Rate in Figures (in Rs.) MPWD SOR & DSR	Rate in Figures (in Rs.) Non SOR & DSR	MPWD SOR & DSR Amount (in Rs.)	Non SOR & DSR / MR Amount (in Rs.)	MPWD SOR & DSR-2018 /ELCT. DSR-2018 & N.S.I
			Hostel Block	Academic Block	EXT.						
4.0	**FIRE EXTINGUISHER**										
4.1	Supply, Installation, Fixing **ABC DRY CHEMICAL POWDER** Fire Extinguisher of **5.0kg** trolley mounted confirming to IS: 2171 and CO2 cartridge confirming to IS: 4947, Powder confirming to IS: 4308.	Each	15	26		41.00		-		-	MPWD SOR 2015 - 2016 - 28.1
4.2	Supply, Installation, Fixing of **CO2** based Aluminium Fire Extinguisher of **4.5 kg** capacity	Each	3	4		7.00		-		-	MPWD SOR 2015 - 2016 - 28.8
4.3	Supply, Installation, Fixing of **MECHANICAL FOAM** (AFFF) Fire Extinguisher of **9.0Ltrs** confirming to IS: 10204 and CO2 Cartridge confirming to IS: 4947, (AFFF) confirming to IS: 4989.	Each		2		2.00		-		-	MPWD SOR 2015 - 2016 - 28.6
4.4	Supply, Installation, Fixing of **MECHANICAL FOAM** (AFFF) Fire Extinguisher of **50Ltrs** onfirming to IS: 10204 and CO2 Cartridge confirming to IS: 4947, (AFFF) confirming to IS: 4989.			1		1.00		-		-	MPWD SOR 2015 - 2016 - 28.7
4.5	Providing and fixing Carbon-Di-Oxide fire extingushers trolley mounted with all accessories internal discharge tube, high pressure discharge hose, discharge nozzle, suspension bracket, ISI marked as per IS:2878 finished externally with red enamel paint and fixed to wall with brackets complete with internal charge.										
a)	Capacity 22.5 kg.	Each		1		1.00	-		-		MR
	TOTAL OF FIRE EXTINGUISHERS CARRIED OVER SUMMARY										

ESTIMATE

OF ELECTRICAL WORKS

THIS PAGE IS INTENTIONALLY LEFT BLANK

SUMMARY (ELECTRICAL WORKS) PHASE-01

Sl No.	AREA	TOTAL AMOUNT
1	Total of Electrical Works High Side	
2	Total of Electrical Works Hostel Block	
	TOTAL	
	SAY	

TRIBAL RESEARCH INSTITUTE, TURA (MEGHALAYA)

SUMMARY FOR ELECTRICAL WORKS(HOSTEL BLOCK) PHASE-01

Sl No.	AREA	MR AMOUNT	SOR/DSR AMOUNT
1	DISTRIBUTION BOARD	-	
2	WIRING SYSTEM (INTERNAL)		7,938,264
3	LIGHTS & FANS	-	
4	INVERTER SYSTEM		-
	SUB TOTAL		
	TOTAL (MR + SOR/DSR)		

SL. NO	ITEM OF WORK	Unit	Qty.	Rate (Rs/unit)	MR AMOUNT (Rs.)	SOR/DSR AMOUNT (Rs.)	MPWD ELE SOR 2016-2017 / DSR-2018 / MARKET RATES (MR)
1	**DISTRIBUTION BOARD**						
1.1	Supplying fitting and fixing of SPN/ TPN MCB Metal Enclosure Distribution Board						56
a	(a) 4 Way (8+12) Modules	Each	5				(a)
b	(b) 6 Way (8+18) Modules	Each	0			-	(b)
c	(c) 8 Way (8+24) Modules	Each	14				(c)
d	(d) 12 Way (8+36) Modules	Each	0				(d)
1.2	Supplying & fixing of Load Kontaket Miniature Circuit Breakers(MCBs)						51
a	(b) 6-32 Amp SP MCB Capacity	Each	350				(b)
1.3	Supplying fitting and fixing of Load Kontaket Miniature Circuit Breakers Double Pole (Isolator)						53
a	(a) 32-125 Amp DP Isolator	Each	5				(a)
1.4	Supplying fittings and fixing complete 415v TPN IC Main Switch with neutral link						49
a	(a) 32 Amp Capacity	Each	1				(a)
b	(b) 63 Amp Capacity	Each	14				(b)
	SUB TOTAL MDBS / DBS / UPS / INVERTER				-		

SL. NO	ITEM OF WORK	Unit	Qty.	Rate (Rs/unit)	MR AMOUNT (Rs.)	SOR/DSR AMOUNT (Rs.)	MPWD ELE SOR 2016-2017 / DSR-2018 / MARKET RATES (MR)
2	**WIRING SYSTEM (Internal wiring) :**						
	LIGHT/CEILING FAN/EXHAUST FAN						
2.1	Drawing of Main and Sub-Main Line wiring approved VIR or PVC cable 250 V Grade in Heavy Gauge 16Swg E.T. Conduit Pipe With all necessary accessories						27
a	(a)With 2×2.5mm^2 copper wire						(a)
i	(i) With copper conductor	per mtr	6000				(i)
2.2	Wiring in concealed with 2×1.5Sqmm PVC insulated single core conductor of 660V grade in No.16 Swg,. Heavy Gauge welded stove enameled painted, 20mm dia MS Conduit pipe (E.T) including accessories such as bends,Tees, junction boxes, sockets, locknuts brass brushes, etc and required sizes of MS Box & recommended front plate for housing switches, sockets, fan regulator bell push, etc matching the colour of the surrounding wall, etc as required or as directed by the Engineer incharge or Architect including earthing Conduit.						20
a	(a) Long Point upto 10mts						(a)
i	(i) With copper conductor	Each	400				(i)
b	(b) Medium Point upto 6mtrs						(b)
i	(i) With copper conductor	Each	300				(i)
c	(c) Short Point upto 3mtrs						(c)
i	(i) With copper conductor	Each	200				(i)
2.3	Wiring as in item No.1 above for Stair Case/Two Way Switch Light Point Controlled by 2 Nos, 2Way 5Amp Switches						26
a	(a) Long Point upto 10mts						(a)
i	(i) With copper conductor	Each	10				(i)
b	(b) Medium Point upto 6mtrs						(b)
i	(i) With copper conductor	Each	10				(i)
c	(c) Short Point upto 3mtrs						(c)
i	(i) With copper conductor	Each	5				(i)
2.4	Supplying fitting and fixing F/T Fan Regulator (Best quality) complete with all accessories & materials.	No	160				93
	POWER POINTS :						
2.5	Drawing of Main and Sub-Main Line wiring approved VIR or PVC cable 250 V Grade in Heavy Gauge 16Swg E.T. Conduit Pipe With all necessary accessories						27
a	(b)With 2×4mm^2 copper wire						(b)
i	(i) With copper conductor	per mtr	6000				(i)
2.6	Wiring as in item No. 19 Complete to a Light Plug Point when fixed elsewhere .						21
a	(a) Long Point upto 10mts						(a)
i	(i) With copper conductor	Each	150				(i)
b	(b) Medium Point upto 6mtrs						(b)
i	(i) With copper conductor	Each	150				(i)
c	(c) Short Point upto 3mtrs						(c)
i	(i) With copper conductor	Each	110				(i)
2.7	Wiring as in item No.19 above with 2×4Sqmm wire including supplying and fitting 15Amp 5 in 1 /SS combined with continuous earth wire to a power plug point complete.						22
a	(a) Long Point upto 10mts						(a)
i	(i) With copper conductor	Each	50				(i)
b	(b) Medium Point upto 6mtrs						(b)
i	(i) With copper conductor	Each	50				(i)
c	(c) Short Point upto 3mtrs						(c)
i	(i) With copper conductor	Each	40				(i)
2.8	Drawing 3 phase line 4 wire with approved VIR or PVC cable 660 V grade wire in Heavy gauge 16Swg E.T. conduit Pipe with all necessary accessories						
a	(a)With 2×2.5mm^2 conductor in MS Conduit						(a)
i	(i) With copper conductor	per mtr	1				(i)
b	(b)With 4×4mm^2 conductor in MS Conduit						(b)
i	(i) With copper conductor	per mtr	1				(i)
c	(c)With 4×6mm^2 conductor in MS Conduit						©
i	(i) With copper conductor	per mtr	1				(i)
d	(d)With 4×10mm^2 conductor in MS Conduit						(d)
i	(i) With copper conductor	per mtr	1000				(i)
e	(e)With 4×16mm^2 conductor in MS Conduit						€

SL. NO	ITEM OF WORK	Unit	Qty.	Rate (Rs/unit)	MR AMOUNT (Rs.)	SOR/DSR AMOUNT (Rs.)	MPWD ELE SOR 2016-2017 / DSR-2018 / MARKET RATES (MR)
i	(i) With copper conductor	per mtr	10				(i)
2.9	Supplying & Drawing of the following size of PVC insulated Copper Wire, S/C in the existing surface/ recessed PVC/ M.S. conduit						134
a	3×10sqmm PVC Copper wire	per mtr	150				(e)
2.10	Providing supplying including carriage testing of the following sizes Alluminium armoured underground cable and all over PVC selected as per ISI mark of 1100volt grade						88
a	(a) 4×4mm^2	Mtr.	1				(a)
b	(b) 4×6mm^2	Mtr.	1				(b)
c	(c) 4×10mm^2	Mtr.	1				(c)
d	(d) 4×16mm^2	Mtr.	200				(d)
2.10	**TELE-COMMUNICATION SYSTEM AND LAN SYSTEM :**						DSR-2018
a	Supplying and drawing of UTP CAT 6 LAN Cable in the existing surface/ recessed Steel/ PVC conduit as required. : 1 run of cable (For Lan & Telephones)	M	1125				1.53.1
b	Supplying and drawing 2 Pair 0.5 mm dia FRLS PVC insulated annealed copper conductor, unarmored telephone cable in the existing surface/ recessed steel/ PVC conduit as required.	M	375				1.18.2
c	SITC of RJ11 Modular Socket for Telephone System complete	Nos.	5				1.24.6
d	SITC of CAT6 UTP RJ45 Modular Socket for Telephone / LAN System.	Nos.	15				
e	Supplying and fixing following size/ modules, GI box alongwith modular base & cover plate for modular Lan & telephone etc in recess etc. as required. : 1 or 2 Module (75mmX75mm)	Nos.	20				1.27.1
f	: Supplying & fixing of following sizes of medium class PVC conduit along with accessories in surface/recess including cutting the wall and making good the same in case of recessed conduit as required. : 25 mm	M	1350				1.21.2
g	SITC of Hybrid IP PBX communication system suitable for minimum 36 extension , IP & Analogue port with Maximum total Port (Extn + Trunk) 36 / Max.Trunk Port 8-12/ Analogue Trunk 12 / ISDN Trunk 6 (12 ch) / Max.IP Gateway 1 (4 ch) / Max Extension Port 28 / Analogue Proprietary Telephone 4/ Single Line Telephone 24/ Digital Proprietary Tel (except T75/T76 Series) 4 or 24 with addtional AC Adaptor Digital Proprietary Tel (T76 Series) 24 / DSS Console 4/ Cell Station 4 or 8 with addtional AC Adaptor/ Voice Processing System 1/ Wireless Telephone 28/ PC-Console 2 / complete with standard accessories as per required. Make: Avaya/ Nortel/ Alcatel-Lucent/ Panasonic	Nos.	1				MR
h	SITC of Digital Phones.	Nos.	1				MR
i	SITC of Analogue Phones.	Nos.	4				MR
j	SITC for CU telephone cable 10 Pair. Make: Skytone / Havells / Bonton	Mtr.	700				MR

SL. NO	ITEM OF WORK	Unit	Qty.	Rate (Rs/unit)	MR AMOUNT (Rs.)	SOR/DSR AMOUNT (Rs.)	MPWD ELE SOR 2016-2017 / DSR-2018 / MARKET RATES (MR)
k	SITC for telephone krone module with suitable back box 10 Pair.	Nos.	2				MR
	Note: *All Computer/ Laptops/ Server / LAN Switches / Racks etc. shall be extra as per Client. Only wiring has been considered.*						
	Sub Total WIRING SYSTEM (Internal wiring) :						
3	**LIGHTS & FANS**						
3.1	Supplying,fitting and fixing of LED lightings complete. Make: Syska / Havells / Signify / Divinity						66
(a)	**(a)LED T5 Tube Lights PA Bulbs (Silver Series)**						(a)
(i)	(i)4-16W (CW) 2' Led Tube Light	Each	230				(i)
(ii)	(ii) 6-22W (with aluminium body).	Each	0			-	(ii)
(b)	**(b) LED Tube Light-Streak Series**	Each					(b)
(i)	(i) 18-22W 1200mm (CW) 4' Led Tube Light	Each	55				(i)
©	**(c) LED Down Light**						©
(vi)	(vi)LED Down Light 28-39W 8" (NW)	Each	0			-	(vi)
(vii)	(vii)LED Down Light(Square)-Royale Series 8-20W (NW)	Each	480				(vii)
3.2	Supplying and fitting of ceiling fan AC operated type 220/250 volt. Complete with 3 Nos of blades down rod canopy hanging shackle & regulator complete with 30mm length down rod supplied with the fan by the dealer but the extra length will be charged @ Rs25.00/ mtr						78
a	(b)AC ceiling Fan '1200'mm sweeps	Each	100				(ii)
3.3	Supplying fitting and fixing of exhaust fan double bearing self lubricating type single phase 50Hz 250V AC operated complete with supporting frame, fan blades, nuts and bolts, fan regulator, capacitor, adjustable type lever and other petty accessories as required						81
a	(a)Light duty Exhaust fan : 250mm/300mm, 1Phase	Each	10				(a)
b	(b)Medium Duty Exhaust Fan: 380mm/450mm, 1Phase	Each	4				(b)
	Sub Total - LIGHTS & FANS				-		

SL. NO	ITEM OF WORK	Unit	Qty.	Rate (Rs/unit)	MR AMOUNT (Rs.)	SOR/DSR AMOUNT (Rs.)	MPWD ELE SOR 2016-2017 / DSR-2018 / MARKET RATES (MR)
4	**INVERTER SYSTEM :**						
4.1	S.I.T.C.**Inveter** shall be of specification as under:						
	: In-put power supply : 415 V (+ 10 % - 20 %), +/- 3%), 3 phase						
	: Output power supply: 415 V (+/-1 %) 3 phase, (+/- 0.5%)						
	: Sinusoidal waveform						
	: Overload capacity of 110% for 15 minutes.						
	: Out-put regulation shall be +/- 1 % against input and load variation.						
	: The Inverter shall be natural /forced air-cooled as required,						
	: The Inverter shall be suitable to work at 45-degree C temperature and relative humidity of 95 %.						
	: Battery pre-exhaust alarm at-least two minutes before 'DC Low' tripping.						
	: Protected against Out-put Over-load, D C input, Low/High In-put Voltage,						
	:battery bank shall be suitable to supply the specified power for 20~25 minutes to the Unit. The batteries shall be "Sealed Maintenance Free Lead Acid" / Value Regulated Lead Acid (VRLA) type of 12v/42AH. out-put to be connected as a D.C. bus system for the Unit with Open Battery Rack & Interlinks						
a	6 KVA Inveter with 20~25 minutes Backup	Each	1				MR
	Make : Powertron (delhi) / Consul neowatt / Luminous						
	Sub Total - INVERTER SYSTEM					-	
	TOTAL						

Note: All ELV / Computer / Laptops, Server / LAN Switches / Racks etc. shall be extra as per Client.

Genral Conditions :

1. Contractor shall take each item approval from consultant before any material procurement at site installation. Aslo shall call for specific item inspection at production shop floor before dispatch clearance.

2. Contractor shall furnish all statutory approvals & certifications with any local authorities or agencies for smooth completion of electrical works.

3. Contrctor shall make shop drawings and take necessary approvals from consultant before site executions.

SUMMARY FOR ELECTRICAL WORKS(HIGH SIDE) PHASE-01

Sl No.	AREA	MR AMOUNT	SOR/DSR AMOUNT
1	H. T. SYSTEM		
2	DG SETS AND SERVO VOLTAGE STABILIZER		-
3	L T PANELS		-
4	MAIN DISTRIBUTION BOARD (MDBS)		-
5	LT CABLES	-	
6	EARTHING & LIGHTINING PROTECTION SYSTEM	-	
7	EXTERNAL LIGHTING		
8	SAFETY ITEMS		-
	SUB TOTAL		
	TOTAL (MR + SOR/DSR)		

Note:

1. MDBs, Cables, Earthiing, of Academic Block and Hostel Block has been considered in this part of High Side BOQ.

2. External Lighting of Hostel Block is a part of this High Side BOQ and External Lighting of Academic Block is a part of Academic Block BOQ.

SL. NO	ITEM OF WORK	Unit	Qty.	Rate (Rs/unit)	MR AMOUNT (Rs.)	SOR/DSR AMOUNT (Rs.)	MPWD ELE SOR 2016-2017 / DSR-2018 / MARKET RATES (MR)
1	**H. T. SYSTEM**						
1.1	Supply, install, test and commissiom (S.I.T.C.) **'H Pole'** made of Steel Tubular pole/rolled steel section/Precast concrete (min 9 mtr. Ht.). Pole shall be selected as per I S: 7321, 1974, the RCC pole conforming to I S: 785, 1964 and PCC pole conforming to I S: 1678, 1978, both carrying earth bond as per rule 90 of Indian Elecricity Rules. The H-pole assembly shall be braced with GI angle of 50x50x6mm at a height of 3M from GL. The H pole shall carry: : One no. lightning Arrestor to protect the system from lightning: : Horn Gap type Lightning arrester conforming to I S: 3070, pt-1, 1985 suitable for O/H line of 11KV as required. When usedd for 11KV, LA shall be suitable for 9KV(rms), with nominal discharge current: 5KA station class. One terminal of the lightning arrestor shall be earthed with 25 x 5 mm G I Strip directly connected to an Earth pit (as per I S: 3043) to be provided for the purpose. : 100mm C channel supporting ISI marked Insulator mounted Drop Out type Fuse Isolator suitable for 11KV, 200A, 3 phase, 50Hz power with 50A fuse rating. The DOF Isolator shall be manually operated with a suitably insulated bar extended up to 1.5M from GL. : One no. 100mm diameter 3M long GI Pipe shall be provided for the 11KV Cable's protection.	No	1				MR
1.2	S.I.T.C. of 11 K V **Vacuum Circuit Breaker panel** – indoor mounted, self-standing type (with 25KA fault level) conforming to IS: 2156 with degree of protection to IPH3 as per I S 3427. The VCB shall conform to I S 13118 and have a continuous current capacity of 630 Amps (25KA/1 sec) and shall be vertically isolated, horizontally draw-out type, three pole, trip free, complete with 24V D C trip-coil, Auxiliary contact for trip circuit, Spring Charging Motor, C T, P T, metering & protection as required. : Energy Meter with MDI suitable for 300KW (Approx.)	No	1				MR
1.3	S.I.T.C. 500 KVA, 11KV / 433V, 50Hz, 3 phase Delta / Star connected ONAN out-door type oil filled transformer with Dyn-11 vector group suitable for floor mounting. The transformer shall have On Load Tap Changer in steps of 2.5 % from +10 % to -10% and shall conform to IS: 1180 / IS: 2026, 1977, Level II, (latest edition). Transformer shall be complete with: : Oil conservator, Oil cooling fins/tube radiaters fitted on either side of the oil tank containing the HT & LT windings. The windings shall be with copper layered for LT side and Cu foil for HT side with class A insulation. : Transformer - IS : 1180 (Part I) : 2014 : Oil - IS : 335 : 1993 : HT side of the transformer shall be suitable for cable termination with porcelain bushing conforming to I S: 2099, complete with cable end-box & cable disconnecting chamber and the LT side suitable for Bus duct termination with Epoxy bushing conforming to I S: 3347 as follows: : H. T. Side : 1 x 3 C x 120 sq. mm. X LPE cable. : L. T. Side : 2 x 3.5 C x 400 sq. mm. X LPE cable. : Transformer shall be provided with Winding Over temperature indication and trip devices. : Transformer shall be provided with a Marshalling box with all the wiring for safety, measuring and indicating devices wired and terminated in it.	Nos	1				MR
1.4	**H T CABLE & TERMINATION :**						

SL. NO	ITEM OF WORK	Unit	Qty.	Rate (Rs/unit)	MR AMOUNT (Rs.)	SOR/DSR AMOUNT (Rs.)	MPWD ELE SOR 2016-2017 / DSR-2018 / MARKET RATES (MR)
1.4.1	Supply and laying of 3 core standered aluminium conductor XLPE (Cross linked polyethylene) insulated PVC bedded, Galvanised flat steel strip armoured cables confirming to I.S. 7098 (Part-II with latest amendments) II KV grade at a depth of 900 mm below ground level over a cushion of 100 mm thick fine river sand all around and protected with well burnt bricks on sides and on top put across. The armouring of cable shall be properly connected with earth conductor by clamps etc.	M	100				MR
	: 3C x 120 sq. mm. A2XFY cable.						
1.4.2	supplying and making indoor cable end termination with heat shrinkable jointing kit complete with all accessories including lugs suitable for following size of 3 core, XLPE aluminium conductor cable of 11 kV grade as required.	No	4				DSR-2018 10.4.2
	: 3C x 120 sq. mm.						
1.4.3	Supplying and making outdoor cable end termination with heat shrinkable jointing kit complete with all accessories including lugs suitable for following size of 3 core, XLPE aluminium conductor cable of 11 kV grade as required.	No	2				DSR-2018 10.5.2
	: 3 C x 120 sq. mm. A2XFY cable.						
	SUB TOTAL H. T. SYSTEM						
2	**DIESEL GENERATING AND SERVO VOLTAGE STABILIZER SYSTEM :**						
	S.I.T.C. 415 V, 3 ph, 50 Hz Radiator cooled diesel generator (D G set) used for standby electrical energy generation. The D G Set shall be SILENT type and shall comprise of:						
	DIESEL ENGINE :						
	- Vertical; multi-cylinder diesel engine of suitable b h p conforming to IS : 10002,						
	: Turbo charged type, : Electronic Governer : Air cooled with water cooled radiator.						
	ALTERNATOR :						
	: Directly coupled alternator conforming to IS: 4722 generating 415 V, 3 phase, 50 Hz, power,						
	Fly-wheel,						
	Common base-frame.						
	Suitable anti-vibration pads of required quantity & size,						
	Silencer shall be residential type,						
	Fuel tank (Day tank) suitable for eight hours operation - complete with fuel level indicator, filler cap, drain valve etc..						
	Electrical starting and control equipment for electrical starting of D. G. Set with:						
	: Battery charger,						
	: Heavy duty battery set. Battery shall be suitable for at least 3 successive cold starts.						
	Control Panel for control, monitoring & protection of D G Set.						
	NOTE: As per the Government notification, D G Setshall be enclosed in a canopy meeting the specified NORMS for sound pollution.						
a	: 200KVA SDG Set	No.	1				MR
b	: 300KVA SDG Set	No.	1				MR
2.2	Testing and running of DG Sets for 2 hours with atleast 1 hour 10% overload including supply of diesel and Lub. oil for the complete testing time period.	LS	1				MR

SL. NO	ITEM OF WORK	Unit	Qty.	Rate (Rs/unit)	MR AMOUNT (Rs.)	SOR/DSR AMOUNT (Rs.)	MPWD ELE SOR 2016-2017 / DSR-2018 / MARKET RATES (MR)
2.3	**SERVO VOLTAGE STABILIZER :**						
	S.I.T.C. of Automatic Servo Voltage Stabilizer (AVR) of 500KVA capacity suitable for UNBALANCED LOAD with automaticvoltage control. It shall be indoor, floor mounted and cooled with transformer oil and shall conform to the requirements of latest edition of I S: 9815-pt-1, 1994, I S: 2026-pt-1&2, 1977 and I S: 5142, 1969. AVR shall comprise of Buck–Boost transformer, 3 nos. single phase Servo Controlled Voltage Regulators and Solid state controls, enclosed in a steel container complete with rollers, cables termination arrangement and all the controls mounted in a separate sheet steel enclosure. The AVR shall have following features:						
	: The input power shall be at 415 - 20% + 10%V, 3 Phase, 4 Wire, 50 Hz.						
	: The Out-put voltage shall be 415 V, Regulation : ± 1 %.						
	: Speed of voltage correction : 17 V / sec or better.						
	: Over load & Short circuit protection with O/L alarm and its acceptance arrangement.						
	: Protection cut-off against Over/Under Voltage.						
	: Single phase protection						
	: Cable terminal Boxes suitable for In-comer & Out-going cables of 2x3.5Cx240 sq mm A2XFY cables or as required.						
	METERING & CONTROLS:						
	: Digital ammeter with selector switch : 2 Nos (I/P-1No + O/P – 1No)						
	: Digital Voltmeter with selector switch : 2 Nos(I/P-1No + O/P – 1No)						
	: Frequency meter : 1No						
	: 3 nos. phase indication lamps.						
	: Auto / manual selector switch.						
	: 3 nos phase voltage correction (increase/decrease) swiches in manual mode.						
	: Out put voltage setting switch in Auto mode						
	: AVR bypass arrangement						
	: Servo-stabilizer shall be complete with first fill of Oil.						
	- 500 KVA Servo stabilizer by pass arrangement	No.	1				MR
	SUB TOTAL DG Sets					-	

SL. NO	ITEM OF WORK	Unit	Qty.	Rate (Rs/unit)	MR AMOUNT (Rs.)	SOR/DSR AMOUNT (Rs.)	MPWD ELE SOR 2016-2017 / DSR-2018 / MARKET RATES (MR)
3	**L. T. PANELS**						
3.1	S.I.T.C Automatic mains failure panel with load management arrangement **(PLC-AMF-LM)** for 200+300 KVA DG sets as per SLD. : The Panel shall be free standing, floor mounted, indoor, compartmentalized cubicle, bolted construction, dust & vermin proof, made of Sheet steel (2 mm for doors & 1.6 mm other faces), surface treated with 7 tank process and painted with anticorrosion paint / powder coated in an approved shade. The enclosure shall be IP 52 protected as per BIS. Electrolytic grade Aluminum bus bars shall be insulated with colored heat shrinkable PVC sleeves & supported on SMC / DMC molded supports with anti-tracking barriers. Each section of the AMF-LM panel shall comprise of the metering, annunciation, protection and control functions as required.	No	1				MR
	: The controls of the AMF panel and the load management sequence as per the SLD, shall be PLC based. The mains failure shall be sensed on incoming side of mains ACB and initiate the starting cycle of D.G. set after an adjustable 0-6 sec delay. The switch over of power between the Mains power and the D G power shall take place with suitably sized (EDO) ACBs in the AMF Panel. After the D.G. set has taken the load, on restoration of mains power, the load shall be connected back to the Mains, however, D.G. set shall continue to run for an adjustable time of 0-10 minutes before switching off.						
	: The PLCs shall be compatible to each other and together, control all the D G sets as per the actual load as required.						
	S.I.T.C Automatic mains failure panel with load management arrangement **PLC PANEL (PLC-AMF-LM)** suitable for 160+625 KVA DG sets with one number ATS Relay as per SLD. The AMF panel shall be complete with:						
	INCOMER:						
	(EDO) ACBs as per SLD as follows with required controls: : 415 V, 50 Hz, 800A, 4Pole (EDO) ACB : 02 Nos. (Transformer i/c & Buscoupler) : 415 V, 50 Hz, 400A, 4Pole MCCB : 01 Nos. (DG-1 i/c) : 415 V, 50 Hz, 400A, 4Pole Contactor : 01 Nos. (DG-1 i/c) : 415 V, 50 Hz, 500A, 4Pole MCCB : 01 Nos. (DG-2 i/c) : 415 V, 50 Hz, 500A, 4Pole Contactor : 01 Nos. (DG-2 i/c)						
	BUS BARS:						
	: 800A TP + N Aluminium suitable for 1.1 K V with a fault level with-stand: 25 K A for 1 second in two sections as per SLD. The Earth Bus shall be of CU & run contnuously throughout the width of the panel.						
	OUTGOINGS:						
	: 415 V, 50 Hz, 500A, 4Pole MCCB : 01 Nos.						
	: 415 V, 50 Hz, 400A, 4Pole MCCB : 01 Nos.						
	: 415 V, 50 Hz, 100A, 4Pole MCCB : 02 Nos.						
	: 415 V, 50 Hz, 63A, 4Pole MCCB : 01 Nos.						
	: 415 V, 50 Hz, 400A, 3Pole, ACB : 01 No. (for Capacitor Bank i/c)						
	: Protection of the feeders as required.						
	: 180 KVAR TP Capacitor Bank, Delta connected in (2x50+2x25+2x10+2x5) KVAR units with 7% de-tuned reactor, 440V, 50Hz complete with digital APFC Relay and automatic switching arrangement, suitably sized protection MCCBs/MCBs, Contactors, Auto / Manual selector switches and indicators for selecting the operating mode - all factory wired. Capacitor bank shall be suitable for heavy duty, 480V, 50 Hz, 3 Ph, 4 Wire system.						

SL. NO	ITEM OF WORK	Unit	Qty.	Rate (Rs/unit)	MR AMOUNT (Rs.)	SOR/DSR AMOUNT (Rs.)	MPWD ELE SOR 2016-2017 / DSR-2018 / MARKET RATES (MR)
	: All controls, Annunciations and indications for safe and trouble-free operation of the D G Sets. : The operational sequence shall be PLC controlled as per the scheme in the SLD.						
	: Class B surge arrester with nominal discharge current(In as per IEC 61643-1) 30KA (for 8/20ms) & Impulse current 7KA(for 10/350ms) between phase to neutral. & 50KA (8/20ms) impulse current for neutral to earth. Maximum continuous operating voltage shall be 320V. Response time (ta) shall be less than 25ns for phase to neutral. Voltage protection level shall be less than 900V at 5KA (8/20ms) for phase to neutral & 1.2KV for neutral to earth. (OBO Bettermann make or equivalent). : 1 No.						
3.2	LT Panel / PCC shall be of non-draw-out type (as per the 'specific Technical Requirement' / BOQ / SLD), in multi-tiers arrangement with modular and compartmentalized construction. However, the ACB shall be draw-out type. The panel shall be lockable with key-lock (as required).						
	: The LT Panel shall be Indoor, sheet steel metal clad, floor mounted, type conforming to (latest edition) of I S: 8623/IEC: 61439-1 (TTA or PTA type) and IEC: 60947/I S: 13947, 1993 for control gear & switch gear with an enclosure protection of IP 52 as per I S: 2147. The LT panel: - When PTTA type, shall be type tested as per the I S: 8623 standard for PTTA panel. - When TTA type, shall be type tested as per the IEC: 61439-1standard for TTA panel. The panel shall be complete with bus bars suitable for 1.1 kV with fault level with-stand: 20KA current for 1 sec. : All the equipment shall be accessible from the front side of the panel in case of 'Single front panel without adequate back excess. Protection relays, KWH & indicating meters, etc. shall be mounted on front door; when required. : Provided with anti-condensation space heaters, thermostat controlled & back-up protection (MCB) in each bay; rated for 240Volts, single phase, 50Hz. AC. Power supply. The space heater shall be of 100W rating (each). Cubicles shall be provided with LED lamps with control switches and suitable sockets.						
	All ACBs shall have: : Inbuilt TRIP LED indication. : Ics = Icu = Icw for 1 sec.for the breakers with built in micro-processor based releases, : Adjustable over current with time setting, short circuit with time setting, earth fault with time setting. : R,Y,B phase indication lamps (LED Type) with Control MCB / MPCB as per fault requirement. : Instantaneous short circuit						
	All MCCBs shall have: : Ics = Icu = 100% for the breakers. : MCCBs upto 200A shall be with thermal - magnetic releases and beyond 200A shall be with micro-processor based releases. : MCCBs shall be with extended rotary handle as required.						
3.2.1	S.I.T.C. **LT Panel # 1** : The panel shall have electrical components as per SLD as follows:	No	1				MR
	□ INCOMER:						
	: : 415 V, 50 Hz, 500A, 4Pole MCCB : 01 No. : Indication & digital metering as per SLD						
	□ BUS BARS:						

SL. NO	ITEM OF WORK	Unit	Qty.	Rate (Rs/unit)	MR AMOUNT (Rs.)	SOR/DSR AMOUNT (Rs.)	MPWD ELE SOR 2016-2017 / DSR-2018 / MARKET RATES (MR)
	: 500A TP + N Aluminium suitable for 1.1 K V with a fault level with-stand: 16 K A for 1 second in two sections as per SLD. The Earth Bus shall be of CU & run contnuously throughout the width of the panel.						
	OUTGOINGS :						
	: 415V, 200A, 4Pole, 50Hz, MCCB : 4 Nos.						
	: 415V, 100A, 4Pole, 50Hz, MCCB : 4 Nos.						
	: Class B+C surge arrester with nominal discharge current(In as per IEC 61643-1) 30KA (for 8/20ms) & Impulse current 7KA(for 10/350ms) between phase to neutral. & 50KA (8/20ms) impulse current for neutral to earth. Maximum continuous operating voltage shall be 320V. Response time (ta) shall be less than 25ns for phase to neutral. Voltage protection level shall be less than 900V at 5KA (8/20ms) for phase to neutral & 1.2KV for neutral to earth. (OBO Bettermann make or equivalent). : 1 No.						
3.2.2	S.I.T.C. **LT Panel # 2** : The panel shall have electrical components as per SLD as follows:	No	1				MR
	INCOMER:						
	: : 415 V, 50 Hz, 400A, 4Pole MCCB : 01 No. : Indication & digital metering as per SLD						
	BUS BARS:						
	: 400A TP + N Aluminium suitable for 1.1 K V with a fault level with-stand: 16 K A for 1 second in two sections as per SLD. The Earth Bus shall be of CU & run contnuously throughout the width of the panel.						
	OUTGOINGS :						
	: 415V, 250A, 4Pole, 50Hz, MCCB : 2 Nos.						
	: 415V, 100A, 4Pole, 50Hz, MCCB : 4 Nos.						
	: 415V, 63A, 4Pole, 50Hz, MCCB : 2 Nos.						
	: Class B+C surge arrester with nominal discharge current(In as per IEC 61643-1) 30KA (for 8/20ms) & Impulse current 7KA(for 10/350ms) between phase to neutral. & 50KA (8/20ms) impulse current for neutral to earth. Maximum continuous operating voltage shall be 320V. Response time (ta) shall be less than 25ns for phase to neutral. Voltage protection level shall be less than 900V at 5KA (8/20ms) for phase to neutral & 1.2KV for neutral to earth. (OBO Bettermann make or equivalent). : 1 No.						
3.2.3	SITC of Auto Phase Reversal Panels suitable for HVAC Panels complete with 415V, 3P, 200A, 50 Hz, Contactors with RYB Led indicators and accessories as required. (For HVAC O/D Units Panel)	No	1				MR
3.2.4	SITC of Auto Phase Reversal Panels suitable for HVAC Panels complete with 415V, 3P, 100A, 50 Hz, Contactors with RYB Led indicators and accessories as required. (HVAC Panel Hostel Block)	No	1				MR
	SUB TOTAL PANELS					-	

SL. NO	ITEM OF WORK	Unit	Qty.	Rate (Rs/unit)	MR AMOUNT (Rs.)	SOR/DSR AMOUNT (Rs.)	MPWD ELE SOR 2016-2017 / DSR-2018 / MARKET RATES (MR)
4	**MAIN DISTRIBUTION BOARD (MDBS)**						
	S.I.T.C. Main Distribution Board (**MDB**) indoor, floor / wall-mounted type, conforming to I S : 13032 (Latest Edition) with key-lockable door; complete with the bus-bars components and accessories mounted and wire connections terminated in the board as per SLD & as follows:						
	All MCCBs shall have: : Ics = Icu = 100% for the breakers. : MCCB's upto 250A shall be with thermal - magnetic releases and beyond 250A shall be with micro-processor based releases. : MCCB's shall be with extended rotary handle.						
4.1	**MDB ACADEMIC BLOCK**	No.	1				MR
	INCOMER:						
	: 200A, 4P, 415 V, 50 Hz. MCCB : 1 No. MCCB shall be with digital Voltmeter & Ammeter & LED phase indications as per SLD.						
	BUS BARS :						
	: 200A TP + N Aluminium suitable for 1.1 K V with a fault level with-stand: 10 K A for 1 second. The Earth Bus shall be of CU & run contnuously throughout the width of the panel.						
	OUTGOINGS :						
	: 415 V, 50 Hz, 63A , 4Pole MCB : 15 Nos.						
	: Class B+C surge arrester Panel Make: Vidyut Control (I) Pvt Ltd / Ambit Switchgear / Tricolite						
4.2	**MDB UPS ACADEMIC BLOCK**	No.	1				MR
	INCOMER:						
	: 63A, 4P, 415 V, 50 Hz. MCB : 1 No. MCB shall be with LED phase indications as per SLD.						
	BUS BARS :						
	: 63A TP + N Aluminium suitable for 1.1 K V with a fault level with-stand: 10 K A for 1 second. The Earth Bus shall be of CU & run contnuously throughout the width of the panel.						
	METERING:						
	OUTGOINGS :						
	: 230 V, 50 Hz, 40A , 2Pole MCB : 04 Nos. Panel Make: Vidyut Control (I) Pvt Ltd / Ambit Switchgear / Tricolite						
4.3	**MDB INVERTER ACADEMIC BLOCK**	No.	1				MR
	INCOMER:						
	: 63A, 4P, 415 V, 50 Hz. MCB : 1 No. MCB shall be with LED phase indications as per SLD.						
	BUS BARS :						
	: 63A TP + N Aluminium suitable for 1.1 K V with a fault level with-stand: 10 K A for 1 second. The Earth Bus shall be of CU & run contnuously throughout the width of the panel.						
	METERING:						
	OUTGOINGS :						
	: 230 V, 50 Hz, 40A , 2Pole MCB : 06 Nos. Panel Make: Vidyut Control (I) Pvt Ltd / Ambit Switchgear / Tricolite						
4.4	**MDB HOSTEL BLOCK**	No.	1				MR
	INCOMER:						
	: 250A, 4P, 415 V, 50 Hz. MCCB : 1 No. MCCB shall be with digital Voltmeter & Ammeter & LED phase indications as per SLD.						
	BUS BARS :						
	: 250A TP + N Aluminium suitable for 1.1 K V with a fault level with-stand: 10 K A for 1 second. The Earth Bus shall be of CU & run contnuously throughout the width of the panel.						
	OUTGOINGS :						

SL. NO	ITEM OF WORK	Unit	Qty.	Rate (Rs/unit)	MR AMOUNT (Rs.)	SOR/DSR AMOUNT (Rs.)	MPWD ELE SOR 2016-2017 / DSR-2018 / MARKET RATES (MR)
	: 415 V, 50 Hz, 63A , 4Pole MCB : 17 Nos. : 415 V, 50 Hz, 100A , 4Pole MCB : 02 Nos. : Class B+C surge arrester Panel Make: Vidyut Control (I) Pvt Ltd / Ambit Switchgear / Tricolite						
4,5	**MDB INVERTER HOSTEL BLOCK** INCOMER: : 63A, 4P, 415 V, 50 Hz. MCB : 1 No. MCB shall be with LED phase indications as per SLD. BUS BARS : : 63A TP + N Aluminium suitable for 1.1 K V with a fault level with-stand: 10 K A for 1 second. The Earth Bus shall be of CU & run contnuously throughout the width of the panel. METERING: OUTGOINGS : : 230 V, 50 Hz, 40A , 2Pole MCB : 05 Nos. Panel Make: Vidyut Control (I) Pvt Ltd / Ambit Switchgear / Tricolite	No.	1				MR
4.6	**MDB HVAC I/D UNITS** INCOMER: : 100A, 4P, 415 V, 50 Hz. MCCB : 1 No. MCCB shall be with LED phase indications as per SLD. BUS BARS : : 100A TP + N Aluminium suitable for 1.1 K V with a fault level with-stand: 10 K A for 1 second. The Earth Bus shall be of CU & run contnuously throughout the width of the panel. OUTGOINGS : : 415 V, 50 Hz, 32A , 4Pole MCB : 04 Nos. : 415 V, 50 Hz, 25A , 4Pole MCB : 03 Nos. : 230 V, 50 Hz, 25A , 2Pole MCB : 05 Nos. : Class B+C surge arrester Panel Make: Vidyut Control (I) Pvt Ltd / Ambit Switchgear / Tricolite	No.	1				MR
	SUB TOTAL MAIN DISTRIBUTION BOARD (MDBS)					-	

SL. NO	ITEM OF WORK	Unit	Qty.	Rate (Rs/unit)	MR AMOUNT (Rs.)	SOR/DSR AMOUNT (Rs.)	MPWD ELE SOR 2016-2017 / DSR-2018 / MARKET RATES (MR)
5	**L T CABLE SYSTEM :**						
5.1	Providing supplying including carriage testing of the following sizes Alluminium armoured underground cable and all over PVC selected as per ISI mark of 1100volt grade						88
a	(a) 4×4mm^2	Mtr.	600				(a)
b	(b) 4×6mm^2	Mtr.	1				(b)
c	(c) 4×10mm^2	Mtr.	25				(c)
d	(d) 4×16mm^2	Mtr.	450				(d)
5.2	Providing laying connection testing & commissioning of the following sizes of 1100V grade alluminium conductor armoured underground cable& overall PVC sheathed cable as per ISI code in trenches including the cost of digging of trenches, sand cushioning with laying etc and refillinig the same in layers or by supporting them in walls and all other accessories as required						102.00
(a)	(a) With 3 $^1/_2$" Core 25sq.mm	Mtr.	1	784.00		784.00	(a)
(b)	(b) With 3 $^1/_2$" Core 35sq.mm	Mtr.	1	904.00		904.00	(b)
(c)	(c) With 3 $^1/_2$" Core 50sq.mm	Mtr.	200	1,086.00		217,200.00	(c)
(d)	(d) With 3 $^1/_2$" Core 70sq.mm	Mtr.	0	1,377.00		-	(d)
(e)	(e) With 3 $^1/_2$" Core 95sq.mm	Mtr.	0	1,645.00		-	(e)
(f)	(f) With 3 $^1/_2$" Core 120sq.mm	Mtr.	0	1,987.00		-	(f)
(g)	(g) With 3 $^1/_2$" Core 150sq.mm	Mtr.	250	2,621.00		655,250.00	(g)
(h)	(h) With 3 $^1/_2$" Core 185sq.mm	Mtr.	100	2,803.00		280,300.00	(h)
(i)	(i) With 3 $^1/_2$" Core 240sq.mm	Mtr.	0	3,034.00		-	(i)
(j)	(j) With 3 $^1/_2$" Core 300sq.mm	Mtr.	0	4,183.00		-	(j)
(k)	(k) With 3 $^1/_2$" Core 400sq.mm	Mtr.	2400	5,246.00		12,590,400.00	(k)
(l)	: 12C x 2.5 sq. mm. 2XWY	Mtr.	100	547.00		54,700.00	(l)
5.3	**CABLE TRAYS**						
	Supply and install following sizes of perforated cable trays and accessories fabricated according to the design specified by IEC: 61537, tested for Safe Working Load (SWL) and hot dip galvanized against corrosion confirming to ISO: 1461-1999 for installations in both; indoor and out-door applications. The cable trays in convenient sections, joined with connectors, suspended from the ceiling with M.S. suspenders including bolts & nuts, painting suspenders etc as required.						DSR-2018
5.3.1	: 300 mm width X 50 mm depth X 2.0 mm thickness	M	100				4.1.4
5.3.2	: 600 mm width X 50 mm depth X 2.0 mm thickness	M	100				4.1.7
5.4	Supplying and fixing of following sizes of medium class PVC conduit along with accessories in surface/recess including cutting the wall and making good the same in case of recessed conduit as required.						
a	: 32 mm dia	M	100				1.21.3
b	: 50 mm dia	M	100				1.21.5
5.5	Supplying and laying of following size DWC HDPE pipe ISI marked along with all accessories like socket, bend, couplers etc. conforming to IS 14930, Part II complete with fitting and cutting, jointing etc.direct in ground (75 cm below ground level) including excavation and refilling the trench but excluding sand cushioning and protective covering etc., complete as required						
a	: 63 mm dia (OD-63 mm & ID-51 mm nominal)	M	500				14.16.1
b	: 120 mm dia (OD-120 mm & ID-103 mm nominal)	M	2250				14.16.3
c	: 200 mm dia (OD-200 mm & ID-175 mm nominal)	M	10				14.16.5
	Cable Trench & Cable Pits consider in civil boq.						
	SUB TOTAL L T CABLE SYSTEM :				-		
6	**EARTHING & LIGHTNING PROTECTION**						

SL. NO	ITEM OF WORK	Unit	Qty.	Rate (Rs/unit)	MR AMOUNT (Rs.)	SOR/DSR AMOUNT (Rs.)	MPWD ELE SOR 2016-2017 / DSR-2018 / MARKET RATES (MR)
6.1	Supplying, fitting and fixing earthing with GI earth Plate 600m×600×6m thick including all accessories & providing masonry enclosure with cover plate having locking arrangement & watering pipe etc complete with charcoal salt coke as required	Nos.	36				107
6.2	Supplying fitting & fixing earthing with copper earth plate 600×600mm×6mm thick including accessories & providing masonry enclosure with cover plate having locking arrangement & watering pipe etc with charcoal , salts etc complete as required	Nos.	10				108
6.3	Supply fitting and fixing of MFE 40, G.I Chemical Earthing electrode filled with CMM and Back fill compound (BFC) (i) Diameter: 50mm Length :2 meter	Nos.	0			-	109(i)
6.4	Supplying and laying of 15mm ×5mm GI/Copper Strip at 0.50mts, below ground.						104.00
a	(a) With 25mm×5mm copper strip	Mtr	100				(a)
b	(b) With 20mm×5mm copper strip	Mtr	1				(b)
c	(c) With 20mm×5mm GI Strip	Mtr	850				©
d	(d) With 25mm×6mm GI Strip	Mtr	370				(d)
6.5	Supplying fitting and fixing of Copper lightning Arrester with 5nos. Finger at the top & copper base plate at the bottom complete.	Nos.	0			-	86(a)
6.6	Supplying fixing connection testing of 8-SWG wire along the wall, columns etc, with necessary clamping as required						103
a	(a) With Copper wire	Mtr	100				(a)
b	(b) With G.I. wire	Mtr	900				(b)
	Note : All earthing values shall be tested less than 1.0 at site post SITC.						
	Sub Total - Earthing & Lightning Protection System				-		

SL. NO	ITEM OF WORK	Unit	Qty.	Rate (Rs/unit)	MR AMOUNT (Rs.)	SOR/DSR AMOUNT (Rs.)	MPWD ELE SOR 2016-2017 / DSR-2018 / MARKET RATES (MR)
7	**EXTERNAL LIGHTING**						66
7.1	**(k) LED Decorative and Garden Light**						(k)
(i)	(i)Wall Light / Wall Recessed Light / Step Light (Approx. 3 to 5 Watt, IP65, WW, 230V) Make: Dotspot / Havells / Divinity / Litolux	Each	0			-	(i)
(ii)	(ii)Garden Light (Approx. 5 to 10 Watt, IP66, WW, 230V, in Ground Concrete Embedded) Make: Dotspot / Havells / Divinity / Litolux	Each	10				(ii)
(iii)	(iii)Bollard Light	Each	0			-	(iii)
(iv)	(iv)Floor Light	Each	0			-	(iv)
7.3	SITC of approx 60 watt decorative LED post top mounted luminaire. Fixture made of Corrosion resistant aluminum housing, Electrostatic powder coating with color option available HM1 to HM6 standard colors with optional RAL codes, as per approval, IP66, IK08, Higher CRI LED Chips, Constant Light Output (CLO), Marine grade body, with IP rated terminal box. Equipped with high efficiency LED chips, Optimized symmetrical lighting distribution, Glare minimizing diffusor, Quarter bin LED chips, Lumen output (absolute photometry): 5400lm - 5600lm, Color temperature: 3000K, 4000K, 2700K (optional), CRI > 70 (4000K), CRI > 80 (3000K), Lumen depreciation: L70B50 > 60000h, Photobiological safety: Risk Group 1, Efficacy (absolute photometry): 90 lm/W (4000K at 1050mA), ULOR: 0%, Drive current: 1050mA, 700mA (optional), 525mA (optional), Optimized PCB - Design, Energy class: A, Power factor: > 0.95, Input Voltage: 220V - 240V, 120V - 270V (optional) at 50Hz / 60Hz. Operating Temperature -50°C / +55°C, Easy installation and maintenance with modular structure, Spigot diameter: 60mm (optional 76mm), In compliance with EN 60598, EN 62722, UL listed, ENEC Certified. Make : Kreis-Heper / Rosa / Cariboni	Each	4				MR
7.4	SITC of approx 78watt LED Street light with Optimized distribution. Fixture should be equipped with highly flexible LED optics that uniformly illuminate the desired road area without spilling light. Fixture should have Marine grade body as Corrosion resistant aluminum housing with electrostatic powder coating . Fixture should be dark sky complient that is there should be no light spill in back or upper hemisphere and Glare should be minimum and should be <10. delivered lumen output of around 9000lm. CCT 4000K and CRI-70 (with 4000K). LED Binning of the fixture should be within 3 MacAdam Ellipse. Fixture should have special optics as combination of type III and type IV to achieve the desired light effect. lumen efficacy of around 110lm/W (with 4000K). Fixture should have lumen depreciation of L90 B50 at 1,18,000 hours. IP 66 and minimum impact resistance of IK08 rated. Fixture should have Operating Temperature range of -5°C to +55°C. Fixture should have surge protection of 10KV. Fixture should be CE & UL certified. Make : Tura -Heper / Cariboni / EWO / Bega	Each	15				MR

SL. NO	ITEM OF WORK	Unit	Qty.	Rate (Rs/unit)	MR AMOUNT (Rs.)	SOR/DSR AMOUNT (Rs.)	MPWD ELE SOR 2016-2017 / DSR-2018 / MARKET RATES (MR)
7.5	Supply, installation, testing and commissioning of 4M Straight Aluminium Pole Mast having approx Ø114 mm base dia and approx Ø60 mm top dia. suitable with bracket attachment for the LED Light fixture on top. Body Material as Cones are rolled from aluminum alloy pipes EN AW-6060. Their base is plated from aluminum alloy plates EN AW-5754. Average thickness between 3 ~ 4 mm. Each aluminium column should have wiring chamber (400mm x 85mm) for fuse-box as Wiring chamber cover is being cut by laser at 500 mm from the base (shall be suitable for cable terminations, wiring, mcb mounting etc). Baseplate Made on die-cast aluminum and being pressed together with the conical surface, which stiffen the base. Base plate Dimensions approx. 224mm x 224mmx8mm. Pitch distance 180x180mm. Pole should have Net weight of 11.4kg with Approximate unit volume of 0.09m3. mounted on concrete foundation. & shall be with sleeves put on the threaded anchor endings on which base plate is installed , what protects against corrosion on threaded anchor endings. Finish Polyester powder coating RAL colors or special finish shall be as per approval. Fixture mounting height at 4m. Make: Technilum / Heper Alcopole / Rosa	Each	4				MR
7.6	Supply, installation, testing and commissioning of 6M high Straight Aluminium Pole Mast having Ø146 mm base dia and Ø70 or Ø60 mm top dia. suitable with bracket attachment for the LED Light fixture on top. Body Material as Cones are rolled from aluminum alloy pipes EN AW-6060. Their base is plated from aluminum alloy plates EN AW-5754. Average thickness between 4 ~ 5 mm. Each aluminium column should have wiring chamber (400mm x 95mm) for fuse-box as Wiring chamber cover is being cut by laser at 500 mm from the base (shall be suitable for cable terminations, wiring, mcb mounting etc). Baseplate Made on die-cast aluminum and being pressed together with the conical surface, which stiffen the base. Base plate Dimensions approx. 320mm x 320mm. Fixing pitch distance 250mm x 250mm. Pole should have Net weight of approx 26kg with Approximate unit volume of 0.265 m3. shall be mounted on concrete foundation. & shall be with sleeves put on the threaded anchor endings on which base plate is installed , what protects against corrosion on threaded anchor endings. Finish Polyester powder coating RAL colors or special finish shall be as per approval. Fixture mounting height at 6m. Make: Technilum / Heper Alcopole / Rosa	Each	15				MR
7.7	Copper Wiring in Existing Casing Capping/Regid PVC Pipe/Conduit Pipe. (for Poles internal from MCB Box to Luminaire)						27
a	2×1.5sqmm PVC copper wire	per mtr	106				(A)
7.8	**Feeder Piller**						

SL. NO	ITEM OF WORK	Unit	Qty.	Rate (Rs/unit)	MR AMOUNT (Rs.)	SOR/DSR AMOUNT (Rs.)	MPWD ELE SOR 2016-2017 / DSR-2018 / MARKET RATES (MR)
a	Supply, installation, testing and commissioning of outdoor type feeder pillar for External Street Lighting (Double door type IP 65) of suitable size not less than 30 cm and up to 45 cm deep made out of 16 SWG thick steel sheet duly compartmentalised having 4 strip busbar of 100 amp capacity, double door with spring loaded allen key type locking arrangement for inner compartment and seperate coupboard type concealed locking arrangement for outer door. (Panel will have separate compartment for electric supply co.) duly rain and dust protected. The panel shall be fixed on M S angle iron frame work of size 50mmX50mmX6mm (NS) 90 cm long legs out of which 45 cm duly grouted in cement concrete 1:2:4 (1 cement, 2 sand and 4 stone aggrigate 20 cm) and having following accessories mounted inside the cubicle panel i/c connections, inter connections, earth studs, painting etc. as reqd.						
	: 415 V, 63 Amps, 4P, (10 KA) MCCB : 1 Each						
	: 415 V, 63 Amps TP + N + E (4 strip) Al. Busbar (20 KA): 1 set.						
	: Voltmeter 0-500 Volt 96 sqmm flush type with selector switch : 1 Each						
	: Ammeter, 96 sqmm flush type with selector switch & 100/ 5 Amp CTs : 1 Set						
	: Indicating lamps (RYB) with control HRC fuse with fuse fitting. : 1 Set						
	: 40 Amp. 4 pole, 10 KA, 415V, 50 Hz MCB : 9 Nos.						
	: 40 Amp. 2 pole, 10 KA, 230V, 50 Hz MCB : 1 Nos.						
	: Power contractor 4 pole, 40 Amp., 415V, 50 Hz. : 7 Nos.						
	: Contact multiplier : 10A, NO/NC as required : 7 Nos.						
	: 10/6 Amp. 1 pole, 10 KA, 415V, 50 Hz MCB : 1 No.						
	: Selector / Test switches as required in control circuit						
	Surge arrestor : B/C type - obo make						
	: Danger notice plate.						
	Note: The contactors shall be controlled by a Time switch / Digital with adjustable time of switching 'ON' and 'Off' the lamps throughout the year; mounted inside the Feeder pillar.	Each	1				MR
	Sub Total - EXTERNAL LIGHTING						
8	**SAFETY ITEMS (S/s Building Only)**						
a	Supplying installation fixing of CO2 based Aluminium Fire Extinguisher of 4.5Kg Capacity	Nos.	8				132 (h)
	Sub Total - Safety System						
	TOTAL						

Note:

1. MDBs, Cables, Earthiing, of Academic Block and Hostel Block has been considered in this part of High Side BOQ.

2. External Lighting of Hostel Block is a part of this High Side BOQ and External Lighting of Academic Block is a part of Academic Block BOQ.

Genral Conditions :

1. Contractor shall take each item approval from consultant before any material procurement at site installation. Aslo shall call for specific item inspection at production shop floor before dispatch clearance.

2. Contractor shall furnish all statutory approvals & certifications with any local authorities or agencies for smooth completion of electrical works.

3. Contrctor shall make shop drawings and take necessary approvals from consultant before site executions.

ESTIMATE

OF HVAC WORKS

THIS PAGE IS INTENTIONALLY LEFT BLANK

SUMMARY

S. No.	Description		Amount (Rs.)	
			DSR/SOR	MR
A	ESTIMATED COST (HOSTEL BLOCK)	Rs.		
	TOTAL OF HVAC WORK (A + B)	Rs.		
	TOTAL OF HVAC WORKS (MPWD SOR / DSR + MR ITEMS)	Rs.		

S.No.	Description	Unit	Total Qty.	Rate Rs.	Amount Rs.	Ref. M.R. / DSR - 2018
1.	**Variable Refrigerant Volume/Flow System (Heat Pump Type)**					
	Supply, installation, testing and commissioning of variable refrigerant volume/flow heat pump type for heating & cooling application modular type air-conditioning system complete with indoor and out door units, out door units to be side/top discharge scroll / rotary compressors with inverter type compressor with individual controller and with refrigerant piping, gas charging R-410, M.S. stand, control cabling as per detail given in specifications and drawing.					
1.1	**Outdoor Unit**					
1.1.1	18 HP (14.4 TR)	Nos.	1			M.R.
1.1.2	12 HP (9.6 TR)	Nos.	1			M.R.
1.2	**Indoor Units**					
1.2.1	VRV Wall Mounted Unit : 1.02 TR	Nos.	28			M.R.
1.3	Imported fittings Y-joints and headers etc.	Nos.	26			M.R.
1.4	Cordless remote controls	Nos.	28			M.R.
2	**Refrigerant Piping**					
	Supply, installation, testing and commissioning of interconnecting refrigerant pipe work with (19mm/13 mm thick) closed cell elastomeric nitrile rubber tubular insulation between each set of indoor & outdoor units complete with supports as per specifications, all the piping shall be eddy current test certified the pipe installation shall be protected with UV & water protective coating of approved make as per specifications and drawings.					
2.1	28.6 mm O.D.(insulation : 19 mm) (Hard Pipe)	RM	50			M.R.
2.2	22.2 mm O.D.(insulation : 13 mm) (Hard Pipe)	RM	10			M.R.
2.3	19.1 mm O.D.(insulation : 13 mm) (Soft Pipe)	RM	25			M.R.
2.4	15.9 mm O.D.(insulation : 13 mm) (Soft Pipe)	RM	70			M.R.
2.5	12.7 mm O.D.(insulation : 13 mm) (Soft Pipe)	RM	110			M.R.
2.6	9.5 mm O.D.(insulation : 13 mm) (Soft Pipe)	RM	70			M.R.
2.7	6.4 mm O.D.(insulation : 13 mm) (Soft Pipe)	RM	95			M.R.

S.No.	Description	Unit	Total Qty.	Rate Rs.	Amount Rs.	Ref. M.R. / DSR - 2018
3	**Drain Piping**					
	Supply & fixing of UPVC drain piping complete with fittings, U-trap, supports valves and insulated with 9 mm thick Nitrile rubber insulation complete as per standards, requirements and drawings.					
3.1	25 mm dia	RM	80			M.R.
4	**Control & Transmission Wiring**					
	Supply and fixing of control cum transmission wiring of 2 core x 1.5 sqmm copper in suitable conduits between indoor and out door unit.	RM	260			M.R.
5	**Controller Wiring**					
	Supply and installation control wiring of 2 core x 1.5 sqmm copper between indoor units and their wired remote.	RM	5			M.R.
6	**Electrical Panel (VRV Outdoor)**					
	Supply, installation, testing and commissioning of sub panel/starter panel weather proof IP-55 board cubical compartmentalised, wall mounted made of 2.0 mm thick steel sheet duly painted complete with voltmeter, ammeter, indicating lights for selector switch, incoming/ outgoing feeders CTS contactors, NO/NC contacts on all outgoings complete as per specifications and required.					
	1 No. 60 Amps TPN incoming MCB.					
	1 set 80 Amps TPN Aluminium conductor bus bar duly sleeved.					
	2 No. 63 Amps TPN MCB outgoing for 18/12 HP VRV Outdoor unit. (16.56/11.02 kw).					
	1 No. 63 Amps TPN MCB for Spare (EP-1)	Set	1			M.R.
7	**ELCB**					
	Supply ,installation, testing & commissioning of weather proof ELCB (Earth leakage circuit breaker) with suitable rating near outdoor unit with IP 55 protection.					
7.1	18 HP	No.	1			M.R.
7.2	12 HP	No.	1			M.R.
8	**Power Cabling**					
	Providing & fixing of XLPE insulated armoured Aluminium & copper cables for various equipments through walls/ceiling with appropriate clamps & fixing arrangement as per specifications and drawings.					

S.No.	Description	Unit	Total Qty.	Rate Rs.	Amount Rs.	Ref. M.R. / DSR - 2018
8.1	4C - 10 sqmm (copper)	Rm	60			M.R.
8.2	4C - 6 sqmm (copper)	Rm	25			M.R.
9	**Cable Tray**					
	Supplying and installing following size of perforated painted with powder coating M.S. cable trays with perforation not more than 17.5%, in convenient sections, joined with connectors, suspended from the ceiling with M.S. suspenders including bolts & nuts, painting suspenders etc as required.					
9.1	150 mm width X 50 mm depth X 1.6 mm thickness	Rm	185			DSR-4.1.2
10	**Earthing**					
	Supply and laying of double earthing continuity conductors of G.I. /G.S.S between panel boards and equipments as drawings.					
10.1	Providing and fixing 6 SWG dia G.I. wire on surface or in recess for loop earthing as required.	Rm	170			DSR 5.16
	Total (Rs).				**2,736,573**	

ARCHITECTURE TENDER DRAWINGS

THIS PAGE IS INTENTIONALLY LEFT BLANK

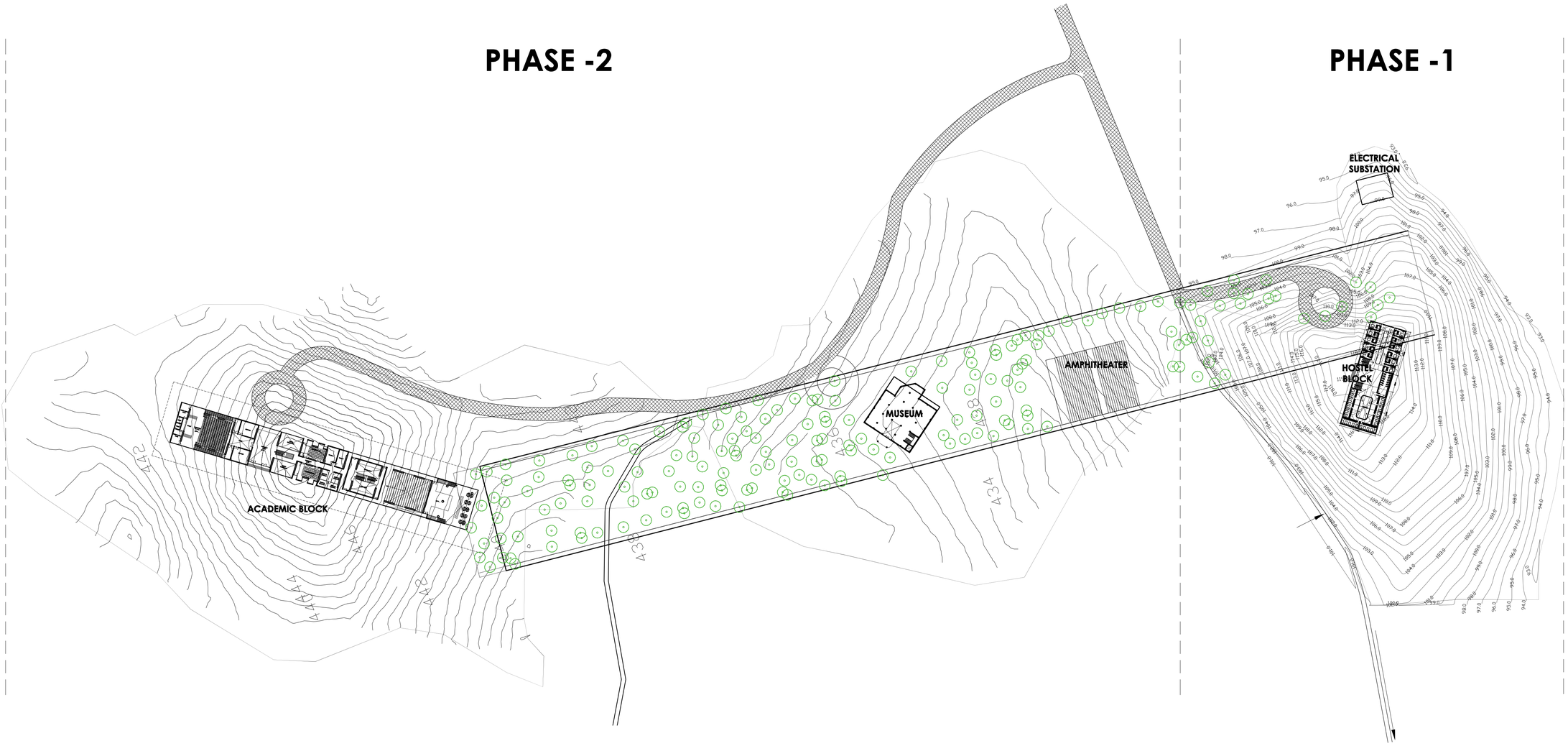

1 - SITE PLAN
SCALE :- 1:2000

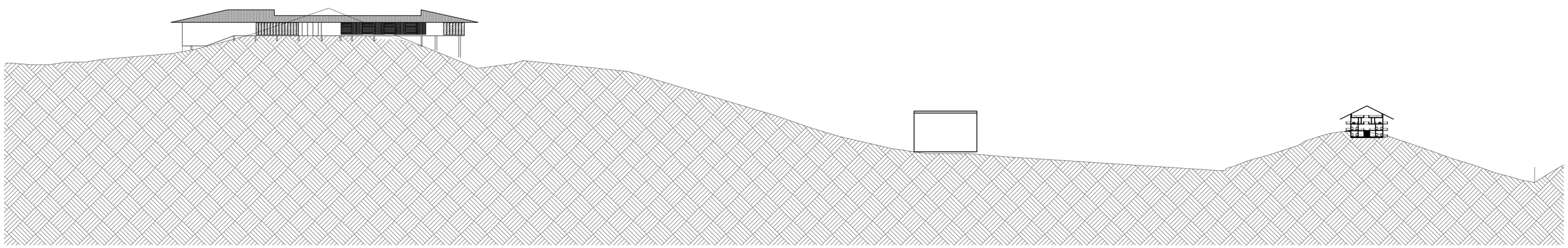

2 - SITE SECTION
SCALE :- 1:2000

NOTES:

1. DO NOT SCALE THE DRAWING, FOLLOW ONLY FIGURED DIMENSIONS.
2. ALL DIMENSIONS GIVEN IN THIS DRAWING ARE IN MILLIMETERS UNLESS NOTED OTHERWISE.
3. ALL DIMENSIONS TO BE VERIFIED ON SITE AND APPROVED BY THE SITE ENGINEER.
4. ANY DISCREPANCY OR AMBIGUITY IN THE DRAWINGS SHOULD IMMEDIATELY BE BROUGHT TO NOTICE OF THE ARCHITECT.
5. ALL DRAWINGS SHOULD BE READ IN CONJUNCTION WITH OTHER RELEVANT ARCHITECTURAL, STRUCTURAL, PLUMBING, MECHANICAL AND ELECTRICAL DRAWINGS.
6. THE ± 0 REFERS TO LEVEL ESTABLISHED AT SITE IN PRESENCE OF THE SITE SUPERVISOR AND THE ARCHITECT. ALL REMAINING LEVELS ARE RELATIVE TO THIS LEVEL.
7. THIS DRAWING IS THE COPYRIGHT OF ARCHOHM CONSULTS AND MUST NOT BE RETAINED, COPIED OR USED WITHOUT THEIR AUTHORITY.

REVISIONS

No.	Date	Descriptions	Revision by

ASSTT. ARCHITECT PLANNER	
ARCHITECT PLANNER-III	
CHIEF ARCHITECT & PLANNER	
HOUSING COMMISSIONER	

Client:

DIRECTORATE OF ARTS & CULTURE GOVERNMENT OF MEGHALAYA, (DAC)

Project: **TRIBAL RESEARCH INSTITUTE, MEGHALAYA**

Architects:

ARCHOHM
ARCHITECTURE ENGINEERING URBANISM INTERIORS
c-28c, sector-8, noida - 201301 (up)
t 91 120 46 40 300
f 91 120 42 46 788
mail@archohm.com
www.archohm.com

Structural Consultants:
TPC TECHNICAL PROJECTS CONSULTANTS PVT. LTD.
H.O.: B-74, Sector-5(Opp Park Plaza)
Noida-201301
Ph. +91-120-4306800, 4306801

PHE Consultants:
TECHNO ENGINEERING CONSULTANTS
pocket-a, 30-d siddhartha extension new delhi-110014, telefax.26344668
e-mail:- ssb_tec@yahoo.co.in, tec@bol.net.in

HVAC Consultants:
ABID HUSAIN CONSULTANTS
LG-1&2, prevan prakash apartment,16a, okhla, new delhi-110025
TEL:- +91-11-26322935 ,FAX: +91-11-26319642
Email: info@ahcon.in

Electrical Consultants:
ARCHOHM
c-28c, sector-8, noida - 201301 (up)
t: 91 120 46 40 300, f: 91 120 42 46 788
mail@archohm.com, www.archohm.com

Environmental Consultants:
##

Landscape Architect:
##

Drawn By	NR
Checked By	AN
Design By	SG

TENDER DRAWING

Sheet Title: SITE PLAN

N

Date:	Scale:	Project No:-
07-10-2020	1:2000	AO-19-011

Drawing No.: A-TRI-SP-01-01 | A | R0

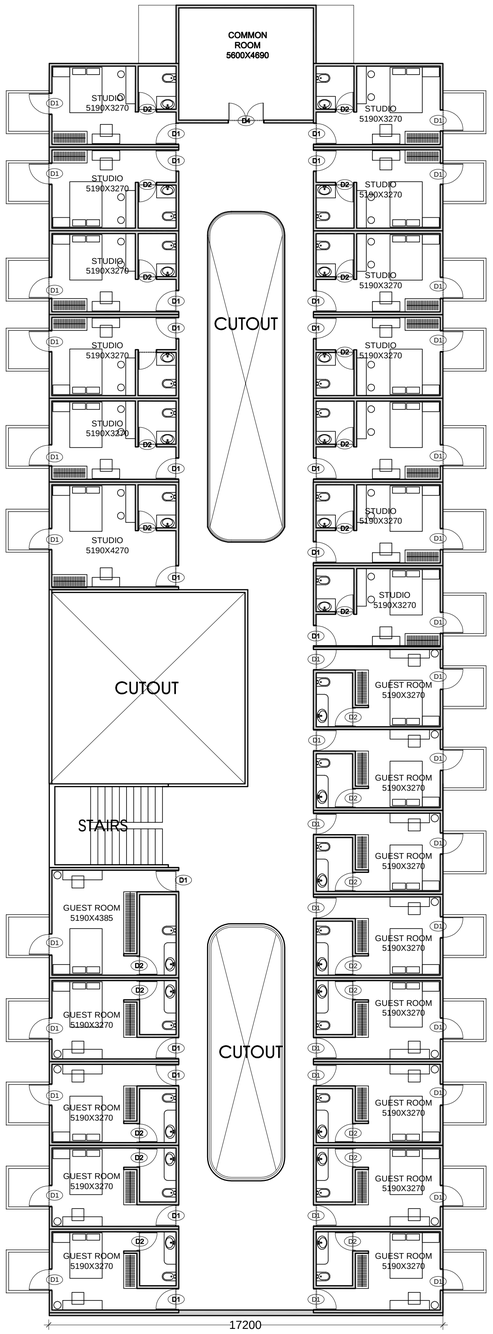

1 FIRST FLOOR PLAN
HOSTEL BLOCK

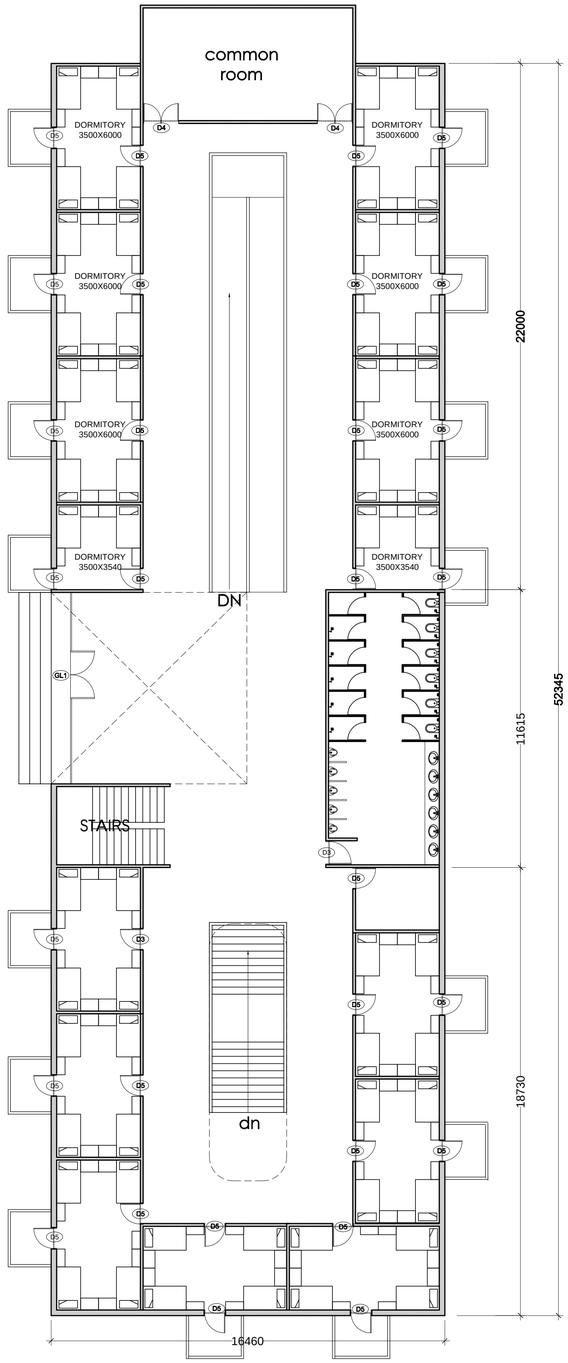

2 GROUND FLOOR PLAN
HOSTEL BLOCK

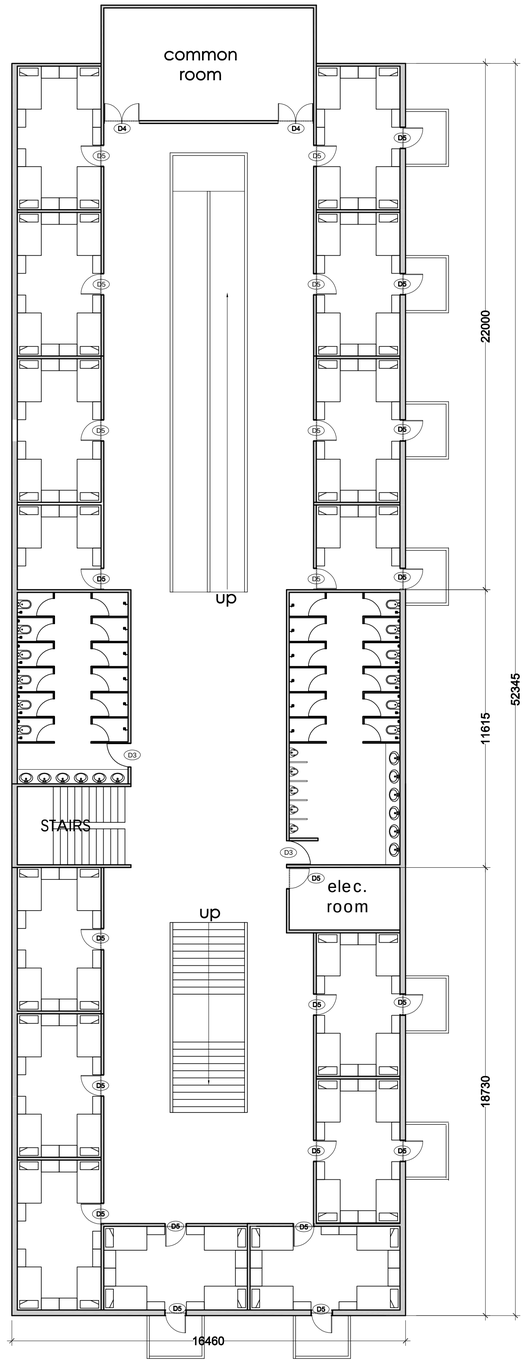

3 LOWER GROUND FLOOR PLAN
HOSTEL BLOCK

NOTES:

1. DO NOT SCALE THE DRAWING, FOLLOW ONLY FIGURED DIMENSIONS.
2. ALL DIMENSIONS GIVEN IN THIS DRAWING ARE IN MILLIMETERS UNLESS NOTED OTHERWISE.
3. ALL DIMENSIONS TO BE VERIFIED ON SITE AND APPROVED BY THE SITE ENGINEER.
4. ANY DISCREPANCY OR AMBIGUITY IN THE DRAWINGS SHOULD IMMEDIATELY BE BROUGHT TO NOTICE OF THE ARCHITECT.
5. ALL DRAWINGS SHOULD BE READ IN CONJUNCTION WITH OTHER RELEVANT ARCHITECTURAL, STRUCTURAL, PLUMBING, MECHANICAL AND ELECTRICAL DRAWINGS.
6. THE ± 0 REFERS TO LEVEL ESTABLISHED AT SITE IN PRESENCE OF THE SITE SUPERVISOR AND THE ARCHITECT. ALL REMAINING LEVELS ARE RELATIVE TO THIS LEVEL.
7. THIS DRAWING IS THE COPYRIGHT OF ARCHOHM CONSULTS AND MUST NOT BE RETAINED, COPIED OR USED WITHOUT THEIR AUTHORITY.

REVISIONS

No.	Date	Descriptions	Revision by

ASSTT. ARCHITECT PLANNER	
ARCHITECT PLANNER-III	
CHIEF ARCHITECT & PLANNER	
HOUSING COMMISSIONER	

Client:

DIRECTORATE OF ARTS & CULTURE GOVERNMENT OF MEGHALAYA, (DAC)

Project: **TRIBAL RESEARCH INSTITUTE, MEGHALAYA**

Architects:

ARCHOHM ARCHITECTURE ENGINEERING URBANISM INTERIORS
c-28c, sector-8, noida - 201301 (up)
t: 91 120 46 40 300
f: 91 120 42 46 788
mail@archohm.com
www.archohm.com

Structural Consultants:
TPC TECHNICAL PROJECTS CONSULTANTS PVT. LTD.
H.O.: B-74, Sector-57(Opp Park Plaza)
Noida-201301
Ph. +91-120-4306800, 4306801

PHE Consultants:
TECHNO ENGINEERING CONSULTANTS
pocket-a, 30-d siddharth extension new delhi-110014, telefax: 26344668
e-mail - ssb_tec@yahoo.co.in, tec@bol.net.in

HVAC Consultants:
ABID HUSAIN CONSULTANTS
LG-1&2, jeevan prakash apartment,16a, okhla, new delhi-110025
TEL: - +91-11-26322935, FAX: +91-11-26319642
Email: info@ahcon.in

Electrical Consultants:
ARCHOHM
c-28c, sector-8, noida - 201301 (up)
t: 91 120 46 40 300, f: 91 120 42 46 788
mail@archohm.com, www.archohm.com

Environmental Consultants:
##

Landscape Architect:
##

Drawn By	NR
Checked By	AN
Design By	SG

TENDER DRAWING

Sheet Title: HOSTEL BLOCK PLANS

N

Date:	Scale:	Project No.:
07-10-2020	1:250	AO-19-011

Drawing No.: A-TRI-HB-01-01 | A | R0

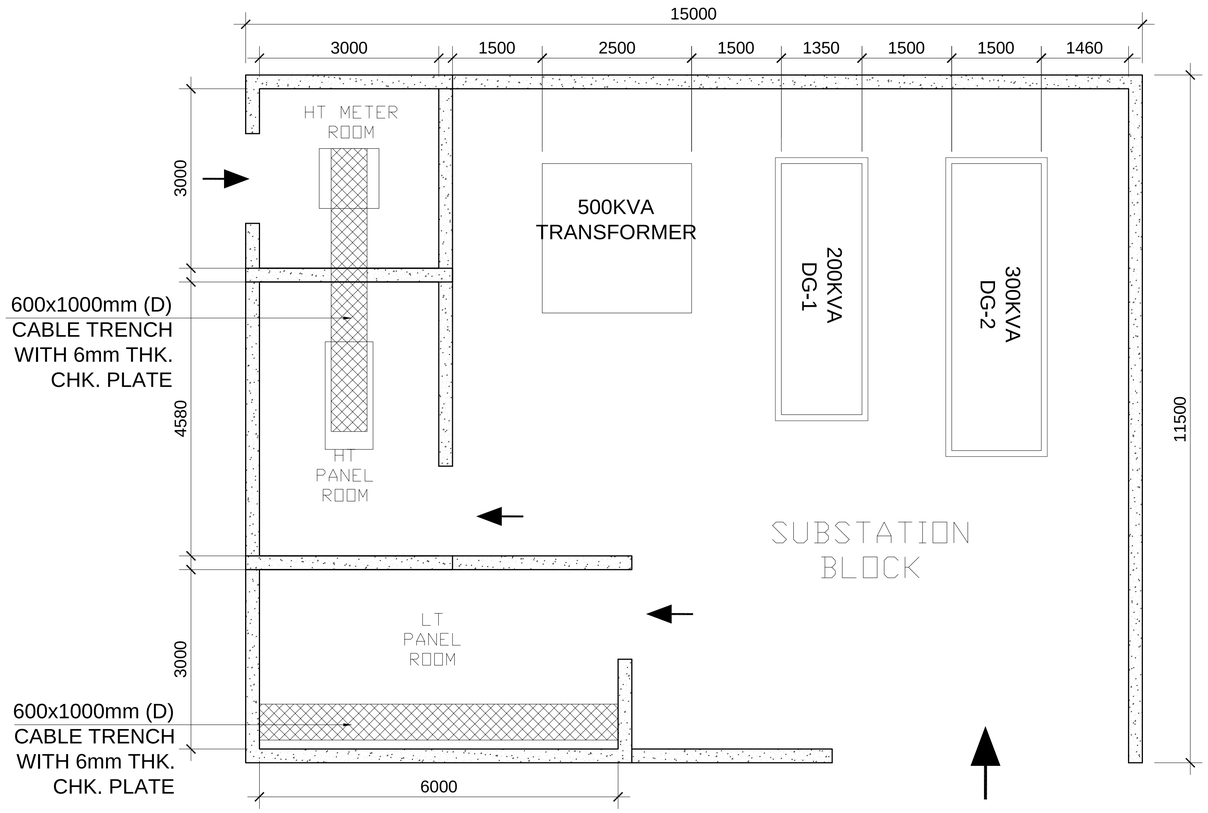

1 GROUND FLOOR PLAN
SUBSTATION BLOCK

2 SECTION
SUBSTATION BLOCK

TENDER DRAWING

NOTES:

1. DO NOT SCALE THE DRAWING, FOLLOW ONLY FIGURED DIMENSIONS.
2. ALL DIMENSIONS GIVEN IN THIS DRAWING ARE IN MILLIMETERS UNLESS NOTED OTHERWISE.
3. ALL DIMENSIONS TO BE VERIFIED ON SITE AND APPROVED BY THE SITE ENGINEER.
4. ANY DISCREPANCY OR AMBIGUITY IN THE DRAWINGS SHOULD IMMEDIATELY BE BROUGHT TO NOTICE OF THE ARCHITECT.
5. ALL DRAWINGS SHOULD BE READ IN CONJUNCTION WITH OTHER RELEVANT ARCHITECTURAL, STRUCTURAL, PLUMBING, MECHANICAL AND ELECTRICAL DRAWINGS.
6. THE ± 0 REFERS TO LEVEL ESTABLISHED AT SITE IN PRESENCE OF THE SITE SUPERVISOR AND THE ARCHITECT. ALL REMAINING LEVELS ARE RELATIVE TO THIS LEVEL.
7. THIS DRAWING IS THE COPYRIGHT OF ARCHOHM CONSULTS AND MUST NOT BE RETAINED, COPIED OR USED WITHOUT THEIR AUTHORITY.

REVISIONS

No.	Date	Descriptions	Revision by

ASSTT. ARCHITECT PLANNER	
ARCHITECT PLANNER-II	
CHIEF ARCHITECT & PLANNER	
HOUSING COMMISSIONER	

Client:

DIRECTORATE OF ARTS & CULTURE GOVERNMENT OF MEGHALAYA, (DAC)

Project: **TRIBAL RESEARCH INSTITUTE, MEGHALAYA**

Architects:

ARCHOHM
ARCHITECTURE ENGINEERING URBANISM INTERIORS

c-28c, sector-8, noida - 201301 (up)
t: 91 120 46 40 300
f: 91 120 42 46 788
mail@archohm.com
www.archohm.com

Structural Consultants:
TPC TECHNICAL PROJECTS CONSULTANTS PVT. LTD.
H.O.: B-74, Sector-57(Opp Park Plaza)
Noida-201301
Ph. +91-120-4306800, 4306801

PHE Consultants:
TECHNO ENGINEERING CONSULTANTS
pocket-a, 30-d siddhartha extension new delhi-110014, telefax: 26344668
e-mail - sob_tec@yahoo.co.in, tec@bol.net.in

HVAC Consultants:
ABID HUSAIN CONSULTANTS
LG-1&2, jeevan prakash apartment,16a, okhla, new delhi-110025
TEL: +91-11-26322935 ,FAX: +91-11-26319642
Email: info@ahcon.in

Electrical Consultants:
ARCHOHM
c-28c, sector-8, noida - 201301 (up)
t: 91 120 46 40 300, f: 91 120 42 46 788
mail@archohm.com, www.archohm.com

Environmental Consultants:
##

Landscape Architect:
##

Drawn By	NR
Checked By	AN
Design By	SG

Sheet Title: SUBSTATION BLOCK PLAN & SECTION

N

Date:	Scale:	Project No:-
07-10-2020	1:100	AO-19-011

Drawing No.: A-TRI-SB-01-01 | A | R0

B	**HOSTEL BLOCK**				
1	**LOWER GROUND FLOOR**				
A	CORRIDORS	ROUGH GRANITE	EXPOSE CONCRETE		
B	DORMITORY	POLISHED GRANITE	EXPOSE CONCRETE		
C	TOILETS	VETRIFIED TILES	VETRIFIES TILES UPTO 2400	METAL CEILING	
2	**GROUND FLOOR**				
A	CORRIDORS	ROUGH GRANITE	EXPOSE CONCRETE		
B	DORMITORY	POLISHED GRANITE	EXPOSE CONCRETE		
C	TOILETS	VETRIFIED TILES	VETRIFIES TILES UPTO 2400	METAL CEILING	
3	**FIRST FLOOR**				
A	CORRIDORS	ROUGH GRANITE	EXPOSE CONCRETE		
B	GUEST ROOMS	POLISHED GRANITE	EXPOSE CONCRETE		
C	TOILETS	VETRIFIED TILES	VETRIFIES TILES UPTO 2400	METAL CEILING	
4	**TERRACE FLOOR**				
1	SITTING AREAS	KOTA STONE			
	PATHWAYS	CHEERA TILES			

NOTES:

1. DO NOT SCALE THE DRAWING, FOLLOW ONLY FIGURED DIMENSIONS.
2. ALL DIMENSIONS GIVEN IN THIS DRAWING ARE IN MILLIMETERS UNLESS NOTED OTHERWISE.
3. ALL DIMENSIONS TO BE VERIFIED ON SITE AND APPROVED BY THE SITE ENGINEER.
4. ANY DISCREPANCY OR AMBIGUITY IN THE DRAWINGS SHOULD IMMEDIATELY BE BROUGHT TO NOTICE OF THE ARCHITECT.
5. ALL DRAWINGS SHOULD BE READ IN CONJUNCTION WITH OTHER RELEVANT ARCHITECTURAL, STRUCTURAL, PLUMBING, MECHANICAL AND ELECTRICAL DRAWINGS.
6. THE ± 0 REFERS TO LEVEL ESTABLISHED AT SITE IN PRESENCE OF THE SITE SUPERVISOR AND THE ARCHITECT. ALL REMAINING LEVELS ARE RELATIVE TO THIS LEVEL.
7. THIS DRAWING IS THE COPYRIGHT OF ARCHOHM CONSULTS AND MUST NOT BE RETAINED, COPIED OR USED WITHOUT THEIR AUTHORITY.

REVISIONS

No.	Date	Descriptions	Revision by

ASSTT. ARCHITECT PLANNER

ARCHITECT PLANNER-II

CHIEF ARCHITECT & PLANNER

HOUSING COMMISSIONER

Client:

DIRECTORATE OF ARTS & CULTURE GOVERNMENT OF MEGHALAYA, (DAC)

Project: **TRIBAL RESEARCH INSTITUTE, MEGHALAYA**

Architects:

ARCHOHM ARCHITECTURE ENGINEERING URBANISM INTERIORS

c-28c, sector-8, noida - 201301 (up)
t 91 120 46 40 300
f 91 120 42 46 788
mail@archohm.com
www.archohm.com

Structural Consultants:
TPC TECHNICAL PROJECTS CONSULTANTS PVT. LTD.
H.O.: B-74, Sector-57(Opp Park Plaza)
Noida-201301
Ph. +91-120-4306800, 4306801

HVAC Consultants:
ABID HUSAIN CONSULTANTS
LG-1&2, jeevan prakash apartment,16a, okhla, new delhi-110025
TEL:- +91-11-26322935 ,FAX: +91-11-26319642
Email: info@ahcon.in

Environmental Consultants:
##

PHE Consultants:
TECHNO ENGINEERING CONSULTANTS
pocket-a, 35-d siddhartha extension new delhi-110014. telefax: 26344668
e-mail- sds_tec@yahoo.co.in, tec@bol.net.in

Electrical Consultants:
ARCHOHM
c-28c, sector-8, noida - 201301 (up)
t: 91 120 46 40 300, f: 91 120 42 46 788
mail@archohm.com, www.archohm.com

Landscape Architect:
##

Drawn By	NR
Checked By	AN
Design By	SG

TENDER DRAWING

Sheet Title: FINISHING SCHEDULE PHASE -1

N

Date: 07-09-2020

Scale:

Project No:- AO-19-011

Drawing No.: A-TRI-AB-00-01

A R0

ELECTRICAL TENDER DRAWINGS

THIS PAGE IS INTENTIONALLY LEFT BLANK

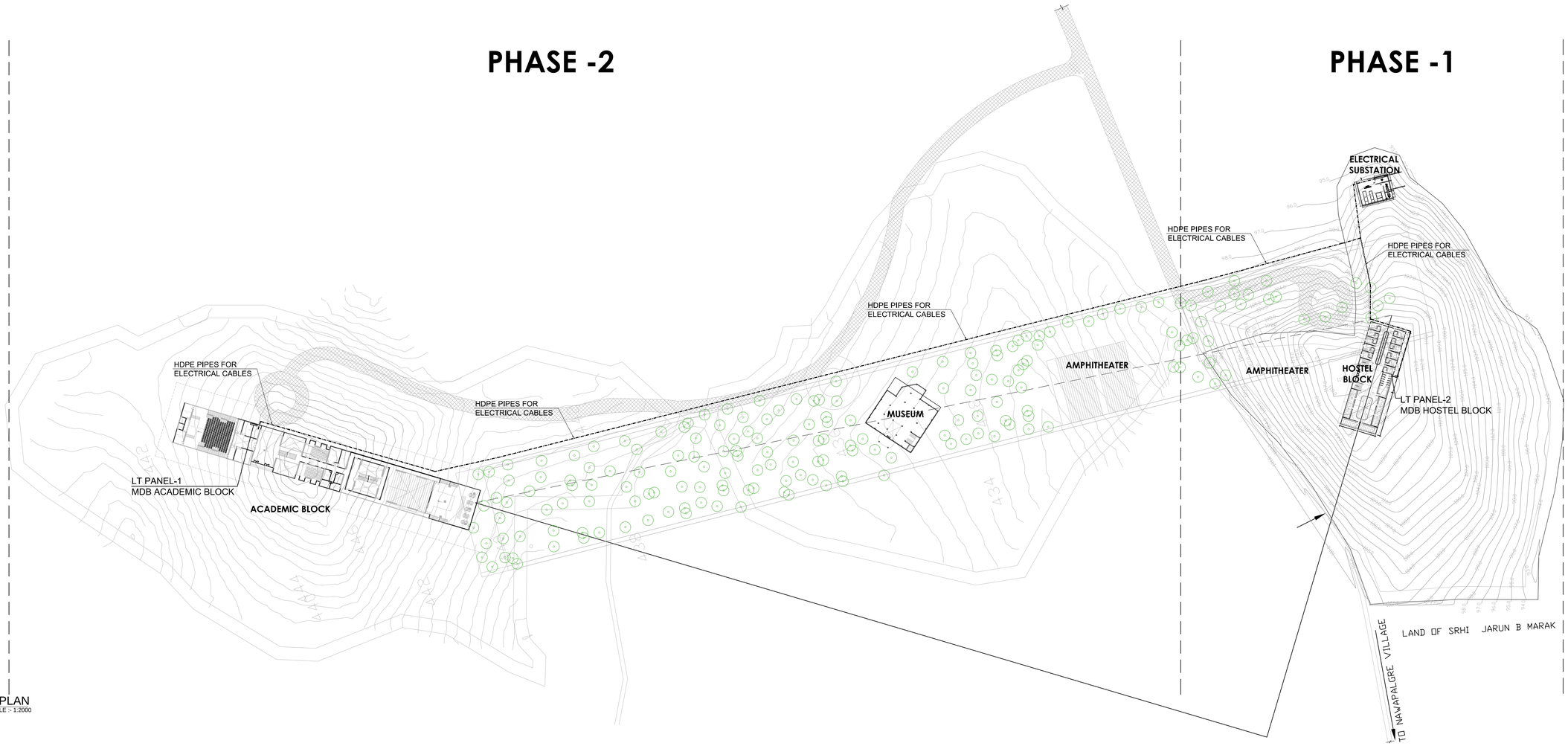

1 - SITE PLAN
SCALE :- 1:2000

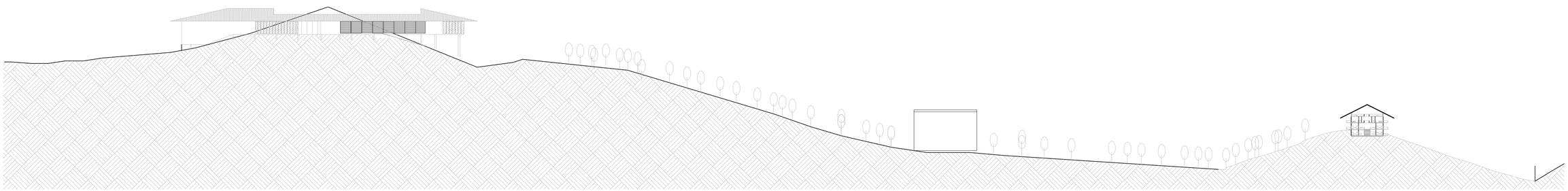

2 - SITE SECTION
SCALE :- 1:2000

SYMBOL	DESCRIPTION
-·-·-·-·-	HDPE PIPES

NOTES:

1. DO NOT SCALE THE DRAWING, FOLLOW ONLY FIGURED DIMENSIONS.
2. ALL DIMENSIONS GIVEN IN THIS DRAWING ARE IN MILLIMETERS UNLESS NOTED OTHERWISE.
3. ALL DIMENSIONS TO BE VERIFIED ON SITE AND APPROVED BY THE SITE ENGINEER.
4. ANY DISCREPANCY OR AMBIGUITY IN THE DRAWINGS SHOULD IMMEDIATELY BE BROUGHT TO NOTICE OF THE ARCHITECT.
5. ALL DRAWINGS SHOULD BE READ IN CONJUNCTION WITH OTHER RELEVANT ARCHITECTURAL, STRUCTURAL, PLUMBING, MECHANICAL AND ELECTRICAL DRAWINGS.
6. THE ± 0 REFERS TO LEVEL ESTABLISHED AT SITE IN PRESENCE OF THE SITE SUPERVISOR AND THE ARCHITECT. ALL REMAINING LEVELS ARE RELATIVE TO THIS LEVEL.
7. THIS DRAWING IS THE COPYRIGHT OF ARCHOHM CONSULTS AND MUST NOT BE RETAINED, COPIED OR USED WITHOUT THEIR AUTHORITY.

REVISIONS

No.	Date	Descriptions	Revision by

ASSTT. ARCHITECT PLANNER	
ARCHITECT PLANNER-III	
CHIEF ARCHITECT & PLANNER	
HOUSING COMMISSIONER	

Client:

DIRECTORATE OF ARTS & CULTURE GOVERNMENT OF MEGHALAYA, (DAC)

Project: **TRIBAL RESEARCH INSTITUTE, MEGHALAYA**

Architects:

ARCHOHM ARCHITECTURE ENGINEERING INTERIOR INTERIORS
c-28c, sector-8, noida - 201301 (up)
t 91 120 46 40 300
f 91 120 42 46 788
mail@archohm.com
www.archohm.com

Structural Consultants:
TPC TECHNICAL PROJECTS CONSULTANTS PVT. LTD.
H.O.: B-7A, Sector-57(Opp Park Plaza)
Noida-201301
Ph. +91-120-4306800, 4306801

PHE Consultants:
TECHNO ENGINEERING CONSULTANTS
pocket-a, 30-d siddhartha extension new delhi-110014, telefax: 26344668
e-mail:- ssb_tec@yahoo.co.in, tec@bol.net.in

HVAC Consultants:
ABID HUSAIN CONSULTANTS
LG-1&2, jeevan prakash apartment,16a, okhla, new delhi-110025
TEL:- +91-11-26322935 ,FAX:- +91-11-26319642
Email: info@ahcon.in

Electrical Consultants:
ARCHOHM
c-28c, sector-8, noida - 201301 (up)
t: 91 120 46 40 300, f: 91 120 42 46 788
mail@archohm.com, www.archohm.com

Environmental Consultants:
##

Landscape Architect:
##

Drawn By	DK
Checked By	AKD
Design By	SPG

TENDER DRAWING

Sheet Title: CABLE ROUTING SITE PLAN

N

Date:	Scale:	Project No:-
07-10-2020	1:2000	AO-19-011

Drawing No.: E-TRI-SP-01-01 | E | R0

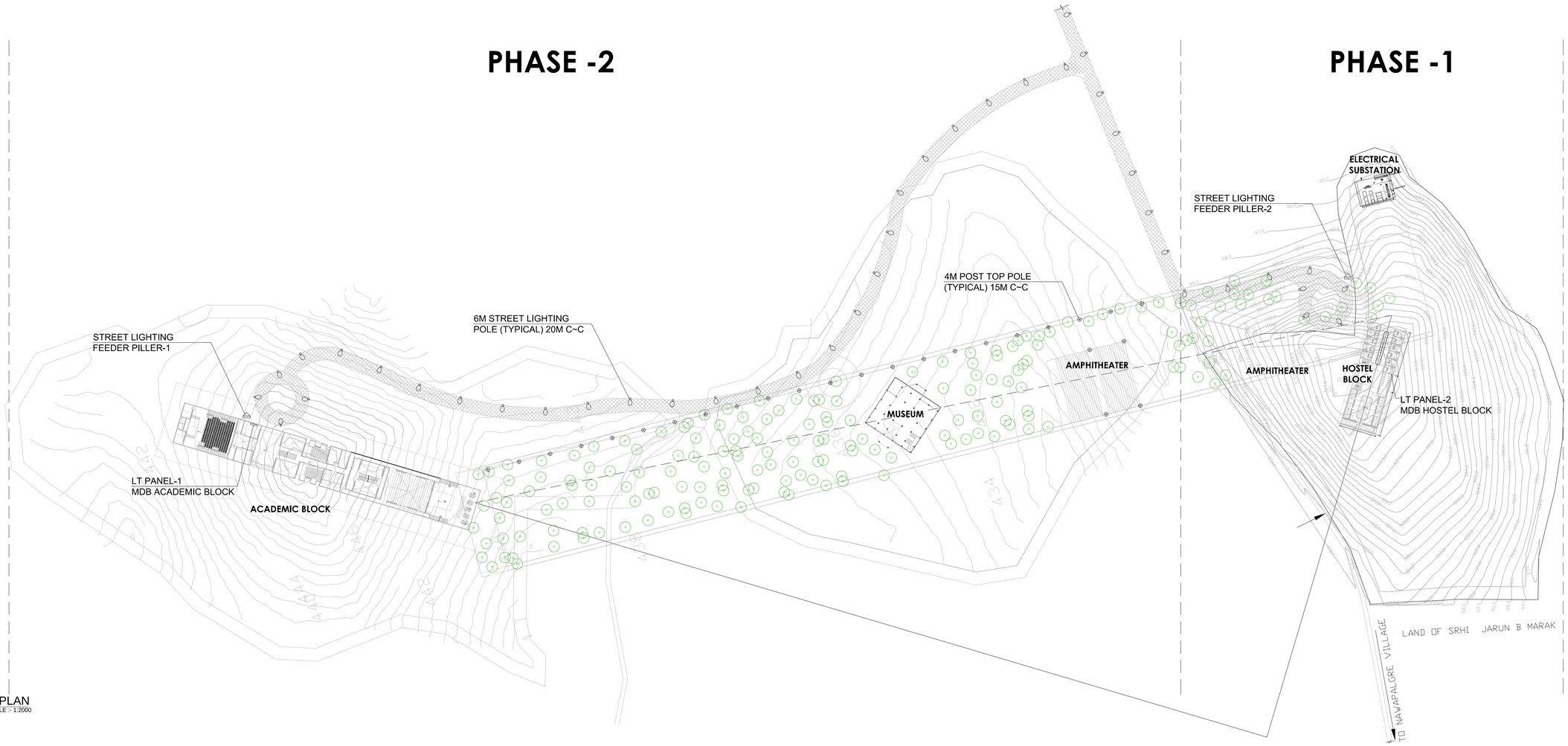

1
-
SITE PLAN
SCALE :- 1:2000

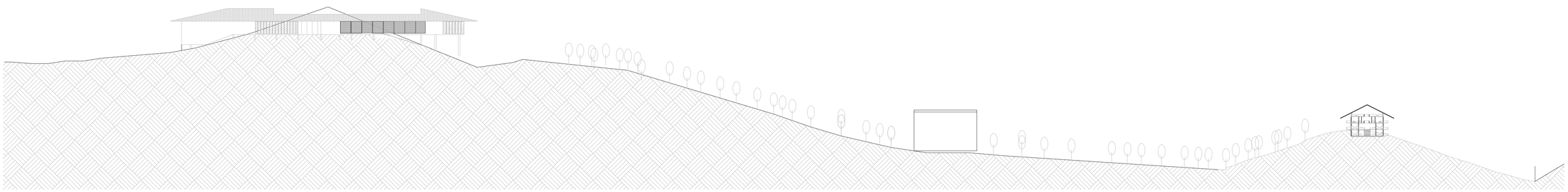

2
-
SITE SECTION
SCALE :- 1:2000

SYMBOL	DESCRIPTION	QTY.
⊕	4M HEIGHT POLE WITH LED POST TOP LIGHT	30 NOS.
	6M HEIGHT POLE WITH LED LIGHT	42 NOS.

NOTES:

1. DO NOT SCALE THE DRAWING, FOLLOW ONLY FIGURED DIMENSIONS.
2. ALL DIMENSIONS GIVEN IN THIS DRAWING ARE IN MILLIMETERS UNLESS NOTED OTHERWISE.
3. ALL DIMENSIONS TO BE VERIFIED ON SITE AND APPROVED BY THE SITE ENGINEER.
4. ANY DISCREPANCY OR AMBIGUITY IN THE DRAWINGS SHOULD IMMEDIATELY BE BROUGHT TO NOTICE OF THE ARCHITECT.
5. ALL DRAWINGS SHOULD BE READ IN CONJUNCTION WITH OTHER RELEVANT ARCHITECTURAL, STRUCTURAL, PLUMBING, MECHANICAL AND ELECTRICAL DRAWINGS.
6. THE ± 0 REFERS TO LEVEL ESTABLISHED AT SITE IN PRESENCE OF THE SITE SUPERVISOR AND THE ARCHITECT. ALL REMAINING LEVELS ARE RELATIVE TO THIS LEVEL.
7. THIS DRAWING IS THE COPYRIGHT OF ARCHOHM CONSULTS AND MUST NOT BE RETAINED, COPIED OR USED WITHOUT THEIR AUTHORITY.

REVISIONS

No.	Date	Descriptions	Revision by

ASSTT. ARCHITECT PLANNER	
ARCHITECT PLANNER-III	
CHIEF ARCHITECT & PLANNER	
HOUSING COMMISSIONER	

Client:

DIRECTORATE OF ARTS & CULTURE GOVERNMENT OF MEGHALAYA, (DAC)

Project: **TRIBAL RESEARCH INSTITUTE, MEGHALAYA**

Architects:

ARCHOHM ARCHITECTURE ENGINEERING INTERIOR INTERIORS
c-28c, sector-8, noida - 201301 (up)
t 91 120 46 40 300
f 91 120 42 46 788
mail@archohm.com
www.archohm.com

Structural Consultants:
TPC TECHNICAL PROJECTS CONSULTANTS PVT. LTD.
H.O.: B-7A, Sector-57(Opp Park Plaza)
Noida-201301
Ph. +91-120-4306800, 4306801

PHE Consultants:
TECHNO ENGINEERING CONSULTANTS
pocket-a, 30-d siddhartha extension new delhi-110014, telefax: 26344668
e-mail:- ssb_tec@yahoo.co.in, tec@bol.net.in

HVAC Consultants:
ABID HUSAIN CONSULTANTS
LG-1&2, jeevan prakash apartment,16a, okhla, new delhi-110025
TEL:- +91-11-26322935 ,FAX:- +91-11-26319642
Email :info@ahcon.in

Electrical Consultants:
ARCHOHM
c-28c, sector-8, noida - 201301 (up)
t: 91 120 46 40 300, f: 91 120 42 46 788
mail@archohm.com, www.archohm.com

Environmental Consultants:
##

Landscape Architect:
##

Drawn By	DK
Checked By	AKD
Design By	SPG

TENDER DRAWING

Sheet Title:
STREET LIGHTING LAYOUT
SITE PLAN

N

Date:	Scale:	Project No:-
07-10-2020	1:2000	AO-19-011

Drawing No.:
E-TRI-SP-01-02 | E | R0

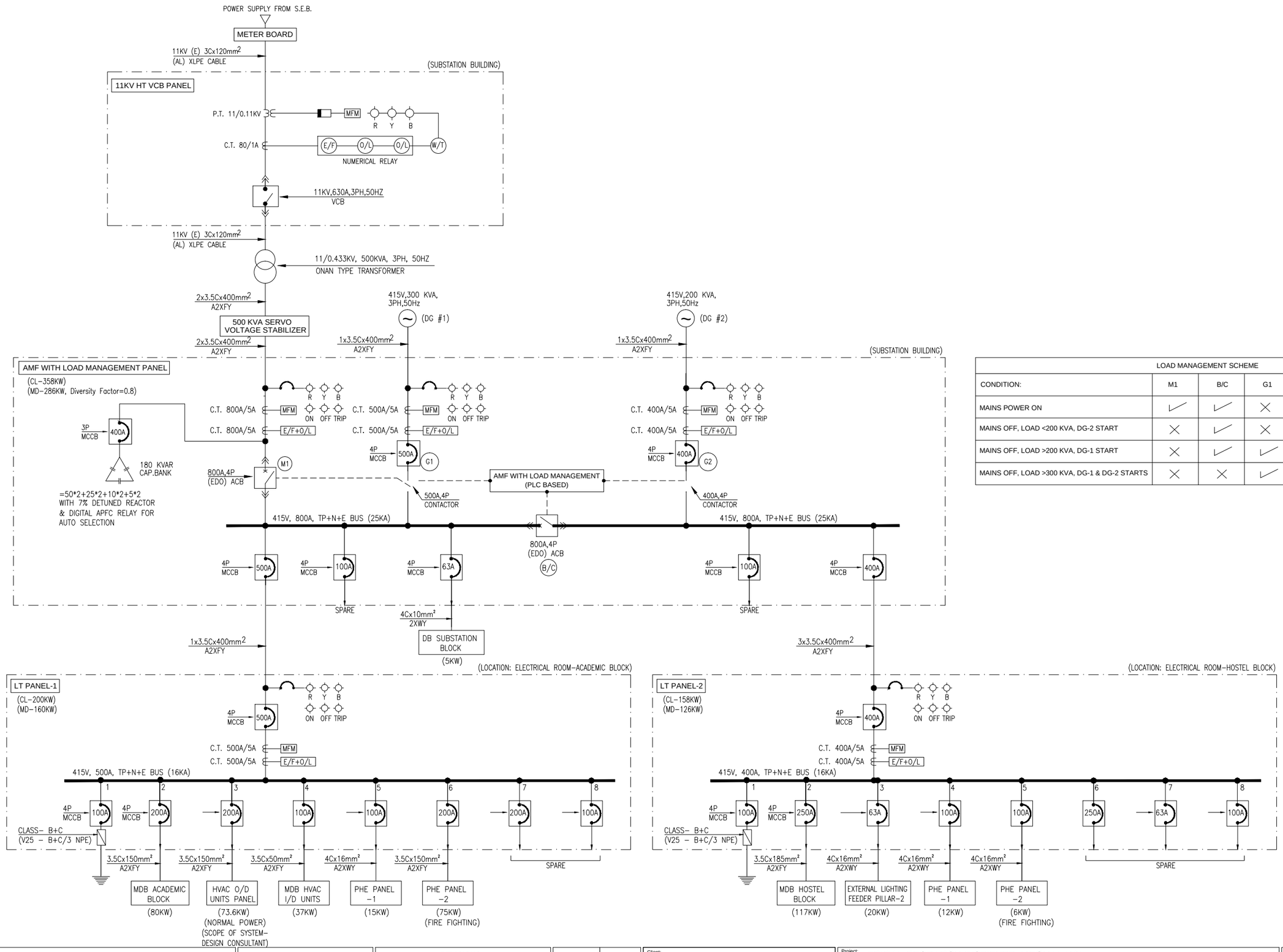

LOAD MANAGEMENT SCHEME				
CONDITION:	M1	B/C	G1	G2
MAINS POWER ON	✓	✓	×	×
MAINS OFF, LOAD <200 KVA, DG-2 START	×	✓	×	✓
MAINS OFF, LOAD >200 KVA, DG-1 START	×	✓	✓	×
MAINS OFF, LOAD >300 KVA, DG-1 & DG-2 STARTS	×	×	✓	✓

NOTES:

1. DO NOT SCALE THE DRAWING, FOLLOW ONLY FIGURED DIMENSIONS.
2. ALL DIMENSIONS GIVEN IN THIS DRAWING ARE IN MILLIMETERS UNLESS NOTED OTHERWISE.
3. ALL DIMENSIONS TO BE VERIFIED ON SITE AND APPROVED BY THE SITE ENGINEER.
4. ANY DISCREPANCY OR AMBIGUITY IN THE DRAWINGS SHOULD IMMEDIATELY BE BROUGHT TO NOTICE OF THE ARCHITECT.
5. ALL DRAWINGS SHOULD BE READ IN CONJUNCTION WITH OTHER RELEVANT ARCHITECTURAL, STRUCTURAL, PLUMBING, MECHANICAL AND ELECTRICAL DRAWINGS.
6. THE ± 0 REFERS TO LEVEL ESTABLISHED AT SITE IN PRESENCE OF THE SITE SUPERVISOR AND THE ARCHITECT. ALL REMAINING LEVELS ARE RELATIVE TO THIS LEVEL.
7. THIS DRAWING IS THE COPYRIGHT OF ARCHOHM CONSULTS AND MUST NOT BE RETAINED, COPIED OR USED WITHOUT THEIR AUTHORITY.

REVISIONS

No.	Date	Descriptions	Revision by

ASSTT. ARCHITECT PLANNER	
ARCHITECT PLANNER-III	
CHIEF ARCHITECT & PLANNER	
HOUSING COMMISSIONER	

Client:

DIRECTORATE OF ARTS & CULTURE GOVERNMENT OF MEGHALAYA, (DAC)

Project: **TRIBAL RESEARCH INSTITUTE, MEGHALAYA**

Architects:
ARCHOHM ARCHITECTURE ENGINEERING URBANISM INTERIORS
c-28c, sector-8, noida - 201301 (up)
t 91 120 46 40 300
f 91 120 42 46 788
mail@archohm.com
www.archohm.com

Structural Consultants:
TPC TECHNICAL PROJECTS CONSULTANTS PVT. LTD.
H.O.: B-74, Sector-57(Opp Park Plaza)
Noida-201301
Ph.:+91-120-4306800, 4306801

PHE Consultants:
TECHNO ENGINEERING CONSULTANTS
pocket-a, 30-d siddhartha extension
new delhi-110014, telefax 26344668
e-mail:- ssb_tec@yahoo.co.in, tec@bol.net.in

HVAC Consultants:
ABID HUSAIN CONSULTANTS
LG-1&2, jeevan prakash apartment,16a, okhla, new delhi-110025
TEL:- +91-11-26322935 ,FAX :+91-11-26319642
Email: info@ahcon.in

Electrical Consultants:
ARCHOHM
c-28c, sector-8, noida - 201301 (up)
t: 91 120 46 40 300, f: 91 120 42 46 788
mail@archohm.com, www.archohm.com

Environmental Consultants:
##

Landscape Architect:
##

Drawn By	DK
Checked By	AKD
Design By	SPG

TENDER DRAWING

Sheet Title: SINGLE LINE DIAGRAM MAIN PANELS

N

Date:	Scale:	Project No.:
07-10-2020	NTS	A0-19-011

Drawing No.: E-TRI-SLD-01-01

E R0

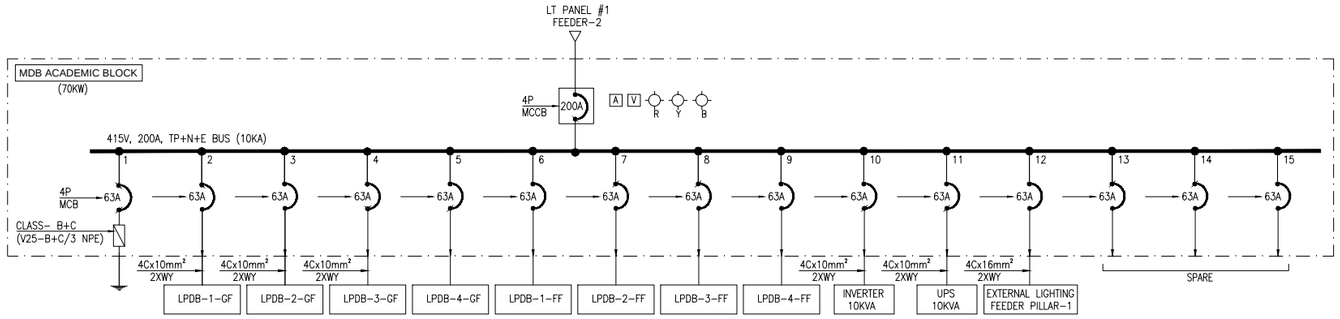

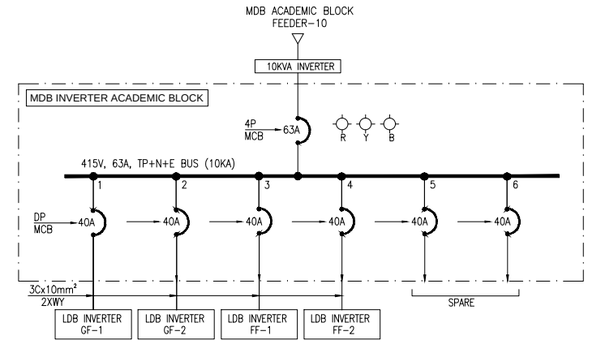

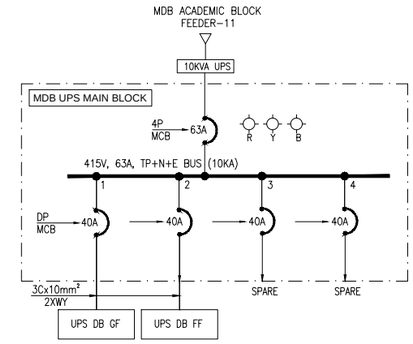

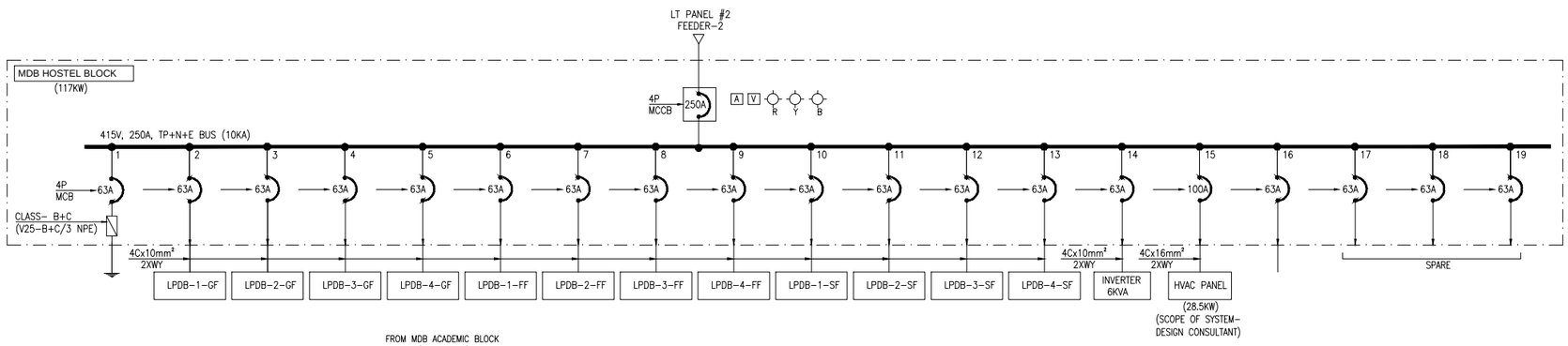

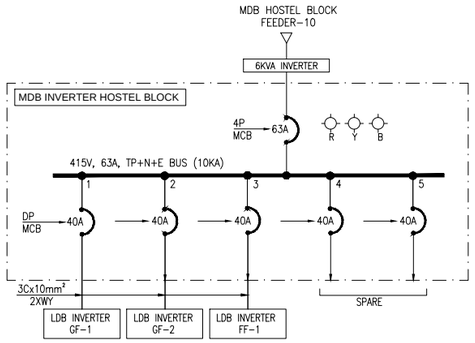

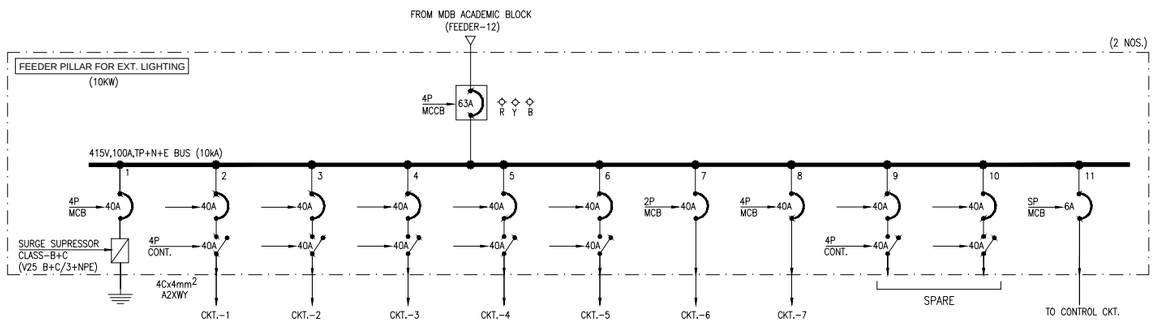

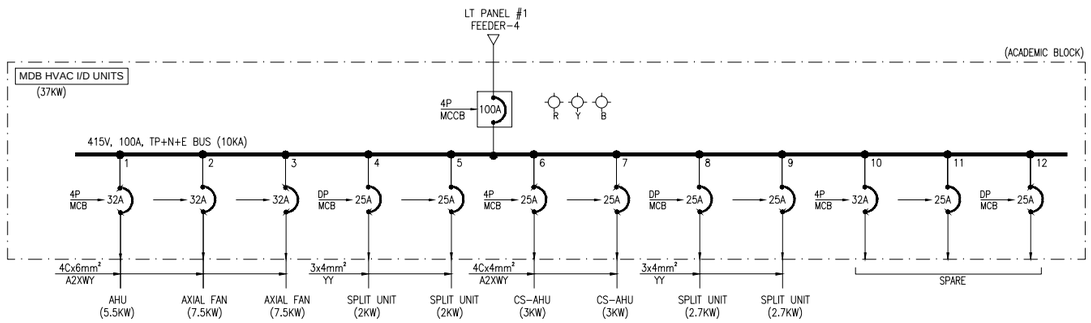

NOTES:

1. DO NOT SCALE THE DRAWING, FOLLOW ONLY FIGURED DIMENSIONS.
2. ALL DIMENSIONS GIVEN IN THIS DRAWING ARE IN MILLIMETERS UNLESS NOTED OTHERWISE.
3. ALL DIMENSIONS TO BE VERIFIED ON SITE AND APPROVED BY THE SITE ENGINEER.
4. ANY DISCREPANCY OR AMBIGUITY IN THE DRAWINGS SHOULD IMMEDIATELY BE BROUGHT TO NOTICE OF THE ARCHITECT.
5. ALL DRAWINGS SHOULD BE READ IN CONJUNCTION WITH OTHER RELEVANT ARCHITECTURAL, STRUCTURAL, PLUMBING, MECHANICAL AND ELECTRICAL DRAWINGS.
6. THE ± 0 REFERS TO LEVEL ESTABLISHED AT SITE IN PRESENCE OF THE SITE SUPERVISOR AND THE ARCHITECT. ALL REMAINING LEVELS ARE RELATIVE TO THIS LEVEL.
7. THIS DRAWING IS THE COPYRIGHT OF ARCHOHM CONSULTS AND MUST NOT BE RETAINED, COPIED OR USED WITHOUT THER AUTHORITY.

REVISIONS

No.	Date	Descriptions	Revision by

ASSTT. ARCHITECT PLANNER	
ARCHITECT PLANNER-III	
CHIEF ARCHITECT & PLANNER	
HOUSING COMMISSIONER	

Client:

DIRECTORATE OF ARTS & CULTURE GOVERNMENT OF MEGHALAYA, (DAC)

Project: **TRIBAL RESEARCH INSTITUTE, MEGHALAYA**

Architects:

ARCHOHM ARCHITECTURE ENGINEERING URBANISM INTERIORS
c-28c, sector-8, noida - 201301 (up)
t 91 120 46 40 300
f 91 120 42 46 788
mail@archohm.com
www.archohm.com

Structural Consultants:
TPC TECHNICAL PROJECTS CONSULTANTS PVT. LTD.
H.O.: B-74, Sector-57(Opp Park Plaza)
Noida-201301
Ph. +91-120-4306800, 4306801

PHE Consultants:
TECHNO ENGINEERING CONSULTANTS
pocket-a, 30-d siddhartha extension new delhi-110014, telefax: 26344668
e-mail:- sdt_tec@yahoo.co.in, tec@bol.net.in

HVAC Consultants:
ABID HUSAIN CONSULTANTS
LG-1&2, jeevan prakash apartment,14a, dahla, new delhi-110035
TEL:- +91-11-26329935 ,FAX: +91-11-26319642
Email: info@ahcon.in

Electrical Consultants:
ARCHOHM
c-28c, sector-8, noida - 201301 (up)
t: 91 120 46 40 300, f: 91 120 42 46 788
mail@archohm.com, www.archohm.com

Environmental Consultant:
##

Landscape Architect:
##

Drawn By	DK
Checked By	AKD
Design By	SPG

TENDER DRAWING

Sheet Title: SINGLE LINE DIAGRAM MDBS

N

Date:	Scale:	Project No.:
07-10-2020	NTS	A0-19-011

Drawing No.: E-TRI-SLD-01-02 | E | R0

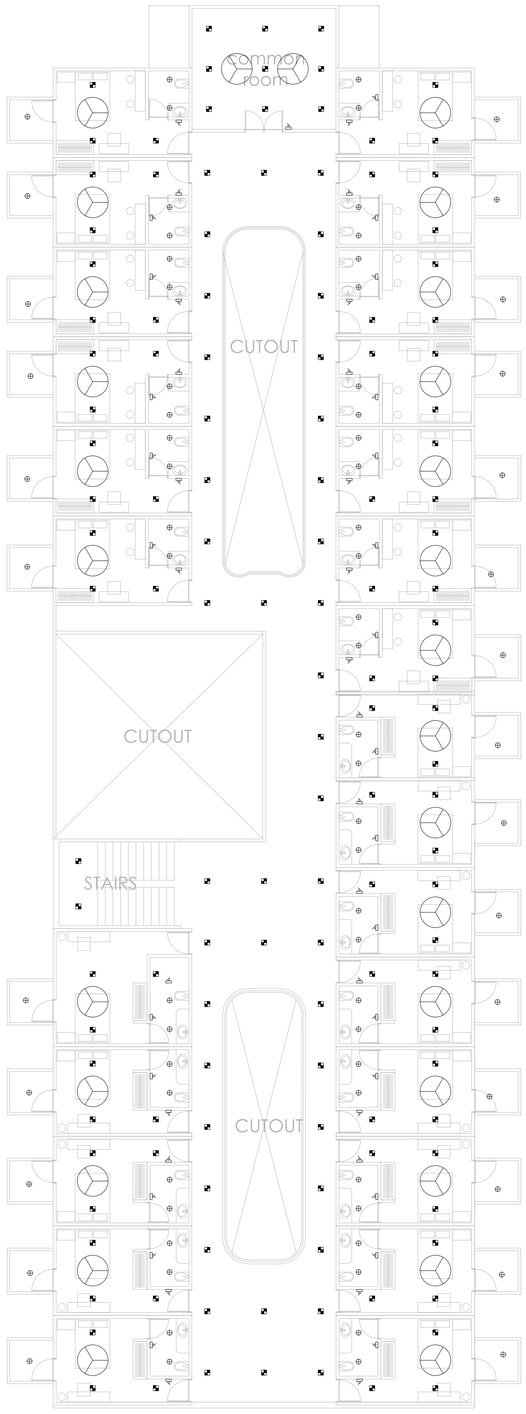

1 - LOWER GROUND FLOOR PLAN
HOSTEL BLOCK

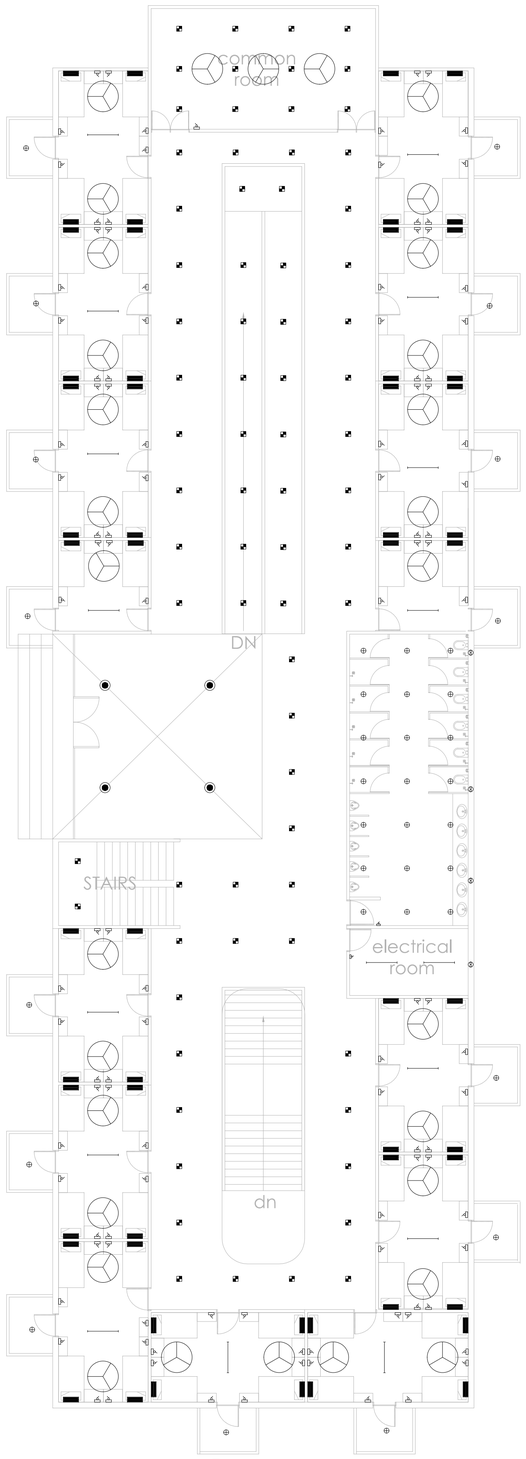

2 - GROUND FLOOR PLAN
HOSTEL BLOCK

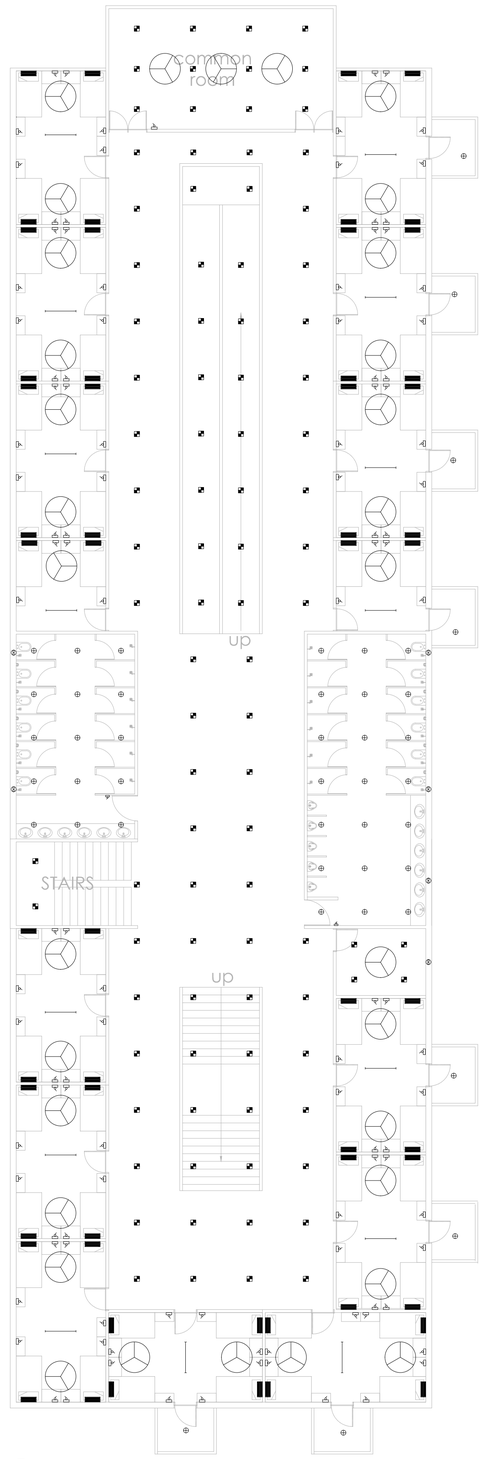

3 - FIRST FLOOR PLAN
HOSTEL BLOCK

LEGEND

SYMBOL	DESCRIPTION	MOUNTING HEIGHT ABOVE FFL. (FROM BOTTOM OF SWITCH BOARD)
	SWITCH 1 WAY	1050mm AFFL (150mm FROM DOOR FRAME)
	SWITCH 2 WAY	1050mm AFFL (150mm FROM DOOR FRAME)
	10 WATT LED LIGHT	RECESSED MOUNTED
	18 WATT LED LIGHT	SURFACE MOUNTED
	36 WATT LED SQUARE LIGHT	RECESSED MOUNTED
	28 WATT LED LINEAR LIGHT	SUSPENDED / RECESSED MOUNTED
	25 WATT LED DECORATIVE LIGHT	SUSPENDED / RECESSED MOUNTED
	28 WATT LED TUBE LIGHT	SURFACE / WALL MOUNTED
	14 WATT LED TUBE LIGHT	SURFACE / WALL MOUNTED
	20 WATT LED SPOT LIGHT (TILTABLE)	SURFACE MOUNTED
	100 WATT LED HIGH BAY LIGHT	SURFACE / SUSPENDED MOUNTED
	3~5 WATT LED STEP LIGHT	WALL MOUNTED @ 300mm
	EXHAUST FAN - 200mm	WALL MOUNTED
	CEILING FAN - 1200mm	SUSPENDED
EXIT	EXIT SIGNAGE	SURFACE / WALL MOUNTED @2100mm
	ELECTRICAL DB	MOUNTED ON WALL (TOP OF DB 1800MM FROM FFL)

NOTES:

1. DO NOT SCALE THE DRAWING, FOLLOW ONLY FIGURED DIMENSIONS.
2. ALL DIMENSIONS GIVEN IN THIS DRAWING ARE IN MILLIMETER'S UNLESS NOTED OTHERWISE.
3. ALL DIMENSIONS TO BE VERIFIED ON SITE AND APPROVED BY THE SITE ENGINEER.
4. ANY DISCREPANCY OR AMBIGUITY IN THE DRAWINGS SHOULD IMMEDIATELY BE BROUGHT TO NOTICE OF THE ARCHITECT.
5. ALL DRAWINGS SHOULD BE READ IN CONJUNCTION WITH OTHER RELEVANT ARCHITECTURAL, STRUCTURAL, PLUMBING, MECHANICAL AND ELECTRICAL DRAWINGS.
6. THE ± 0 REFERS TO LEVEL ESTABLISHED AT SITE IN PRESENCE OF THE SITE SUPERVISOR AND THE ARCHITECT. ALL REMAINING LEVELS ARE RELATIVE TO THIS LEVEL.
7. THIS DRAWING IS THE COPYRIGHT OF ARCHOHM CONSULTS AND MUST NOT BE RETAINED, COPIED OR USED WITHOUT THEIR AUTHORITY.

REVISIONS

No.	Date	Descriptions	Revision by

ASSTT. ARCHITECT PLANNER	
ARCHITECT PLANNER-III	
CHIEF ARCHITECT & PLANNER	
HOUSING COMMISSIONER	

Client:

GOVERNMENT OF MEGHALAYA
ARTS & CULTURE DEPARTMENT

Project: **TRIBAL RESEARCH INSTITUTE, MEGHALAYA**

Architects:

ARCHOHM ARCHITECTURE ENGINEERING INTERIORS
c-28c, sector-8, noida - 201301 (up)
t 91 120 46 40 300
f 91 120 42 46 788
mail@archohm.com
www.archohm.com

Structural Consultants:
TPC TECHNICAL PROJECTS CONSULTANTS PVT. LTD.
H.O.: B-74, Sector-57(Opp Park Plaza)
Noida-201301
Ph. +91-120-4306800, 4306801

PHE Consultants:
TECHNO ENGINEERING CONSULTANTS
pocket-a, 30-d sidharth extension new delhi-110014, telefax: 26344668
e-mail - ssb_tec@yahoo.co.in, tec@bol.net.in

HVAC Consultants:
ABID HUSAIN CONSULTANTS
LG-1&2, jeevan prakash apartment,16a, okhla, new delhi-110025
TEL: +91-11-26322935, FAX: +91-11-26319642
Email: info@ahcon.in

Electrical Consultants:
ARCHOHM
c-28c, sector-8, noida - 201301 (up)
t: 91 120 46 40 300, f: 91 120 42 46 788
mail@archohm.com, www.archohm.com

Environmental Consultants:
##

Landscape Architect:
##

Drawn By	DK
Checked By	AKD
Design By	SPG

TENDER DRAWING

Sheet Title: LIGHTING LAYOUT HOSTEL BLOCK PLANS

Date:	Scale:	Project No:-
14-09-2020	1:200	AO-19-011

Drawing No.: E-TRI-HB-01-01 | E | R0

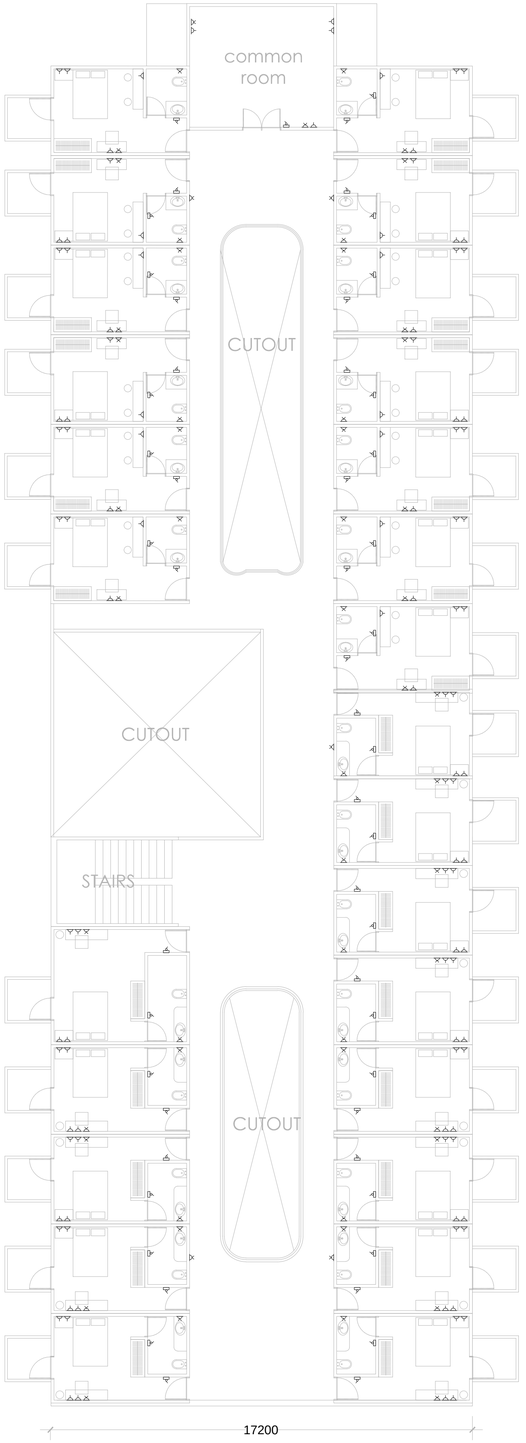

1 - LOWER GROUND FLOOR PLAN
HOSTEL BLOCK

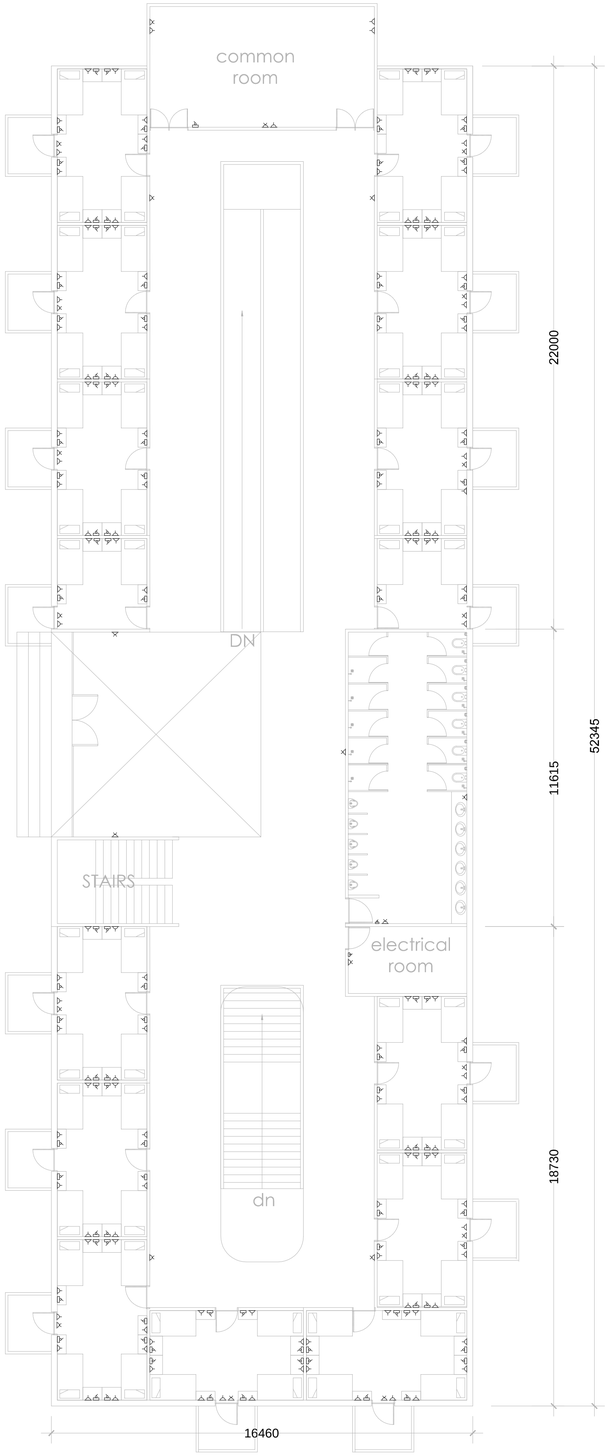

2 - GROUND FLOOR PLAN
HOSTEL BLOCK

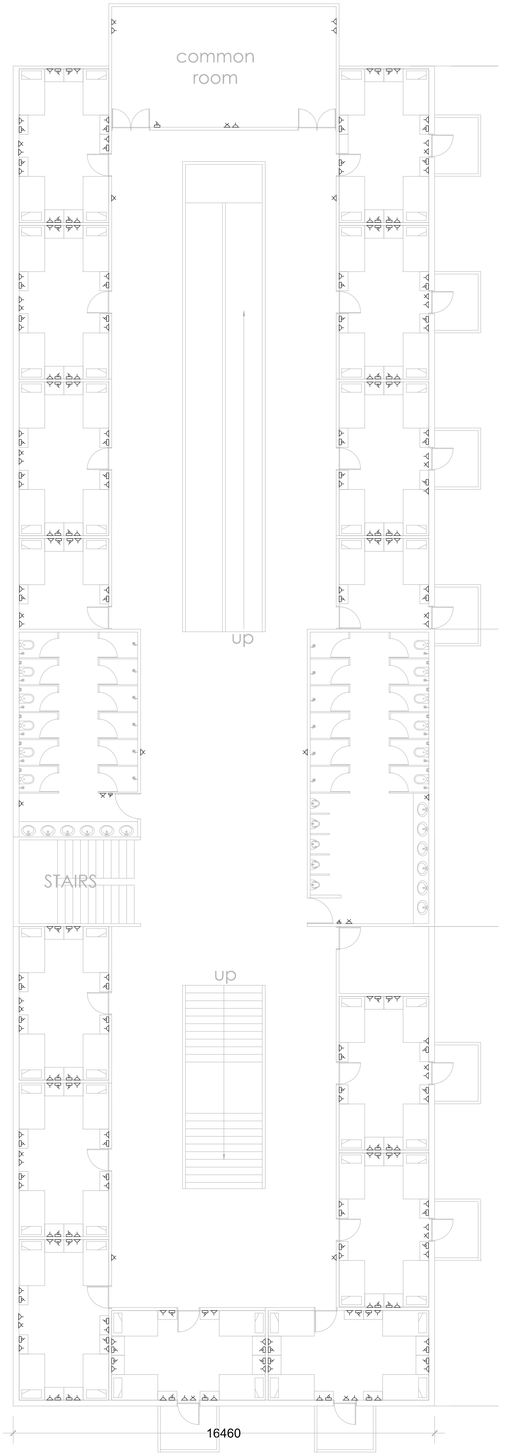

3 - FIRST FLOOR PLAN
HOSTEL BLOCK

LEGEND

SYMBOL	DESCRIPTION	MOUNTING HEIGHT ABOVE FFL. (FROM BOTTOM OF SW SOCKET)
	SWITCH 1 WAY	1050MM
	SWITCH 2 WAY	1050MM
	13/6A SWITCH SOCKET (RAW POWER)	150MM OR AS MENTION
	13/6A SWITCH SOCKET (ON UPS)	150MM OR AS MENTION
	16/6A SWITCH SOCKET (RAW POWER)	150MM OR AS MENTION
	16/6A SWITCH SOCKET (ON UPS)	150MM OR AS MENTION
	LAN SOCKET	150MM OR AS MENTION
	TELEPHONE SOCKET	150MM OR AS MENTION
	WiFi ROUTER	CEILING / WALL@-300mm FROM CEILING
	ELECTRICAL DB	MOUNTED ON WALL (TOP OF DB 1800MM FROM FFL)

NOTES:

1. DO NOT SCALE THE DRAWING, FOLLOW ONLY FIGURED DIMENSIONS.
2. ALL DIMENSIONS GIVEN IN THIS DRAWING ARE IN MILLIMETER'S UNLESS NOTED OTHERWISE.
3. ALL DIMENSIONS TO BE VERIFIED ON SITE AND APPROVED BY THE SITE ENGINEER.
4. ANY DISCREPANCY OR AMBIGUITY IN THE DRAWINGS SHOULD IMMEDIATELY BE BROUGHT TO NOTICE OF THE ARCHITECT .
5. ALL DRAWINGS SHOULD BE READ IN CONJUNCTION WITH OTHER RELEVANT ARCHITECTURAL, STRUCTURAL, PLUMBING, MECHANICAL AND ELECTRICAL DRAWINGS.
6. THE ± 0 REFERS TO LEVEL ESTABLISHED AT SITE IN PRESENCE OF THE SITE SUPERVISOR AND THE ARCHITECT. ALL REMAINING LEVELS ARE RELATIVE TO THIS LEVEL.
7. THIS DRAWING IS THE COPYRIGHT OF ARCHOHM CONSULTS AND MUST NOT BE RETAINED, COPIED OR USED WITHOUT THEIR AUTHORITY.

REVISIONS

No.	Date	Descriptions	Revision by

ASSTT. ARCHITECT PLANNER	
ARCHITECT PLANNER-III	
CHIEF ARCHITECT & PLANNER	
HOUSING COMMISSIONER	

Client:

GOVERNMENT OF MEGHALAYA
ARTS & CULTURE DEPARTMENT

Project: **TRIBAL RESEARCH INSTITUTE, MEGHALAYA**

Architects:

ARCHOHM
ARCHITECTURE ENGINEERING URBANISM INTERIORS
c-28c, sector-8, noida - 201301 (up)
t 91 120 46 40 300
f 91 120 42 46 788
mail@archohm.com
www.archohm.com

Structural Consultants:
TPC TECHNICAL PROJECTS CONSULTANTS PVT. LTD.
H.O : B-74, Sector-57(Opp Park Plaza)
Noida-201301
Ph.:+91-120-4306800, 4306801

PHE Consultants:
TECHNO ENGINEERING CONSULTANTS
pocket-a, 30-d siddharma extension
new delhi-110014, telefax: 26344668
e-mail:- tsb_tec@yahoo.co.in, tec@bol.net.in

HVAC Consultants:
ABID HUSAIN CONSULTANTS
LG-1&2, jeevan prakash apartment,16a, sirifas, new delhi-110025
TEL: +91-11-26322935 ,FAX: +91-11-26319642
Email: info@ahcon.in

Electrical Consultants:
ARCHOHM
c-28c, sector-8, noida - 201301 (up)
t: 91 120 46 40 300, f: 91 120 42 46 788
mail@archohm.com, www.archohm.com

Environmental Consultants:
##

Landscape Architect:
##

Drawn By	DK
Checked By	AKD
Design By	SPG

TENDER DRAWING

Sheet Title: SW SOCKET LAYOUT HOSTEL BLOCK PLANS

Date: 07-10-2020	Scale: 1:200	Project No:- AO-19-011
Drawing No.: E-TRI-HB-01-02	E	R0

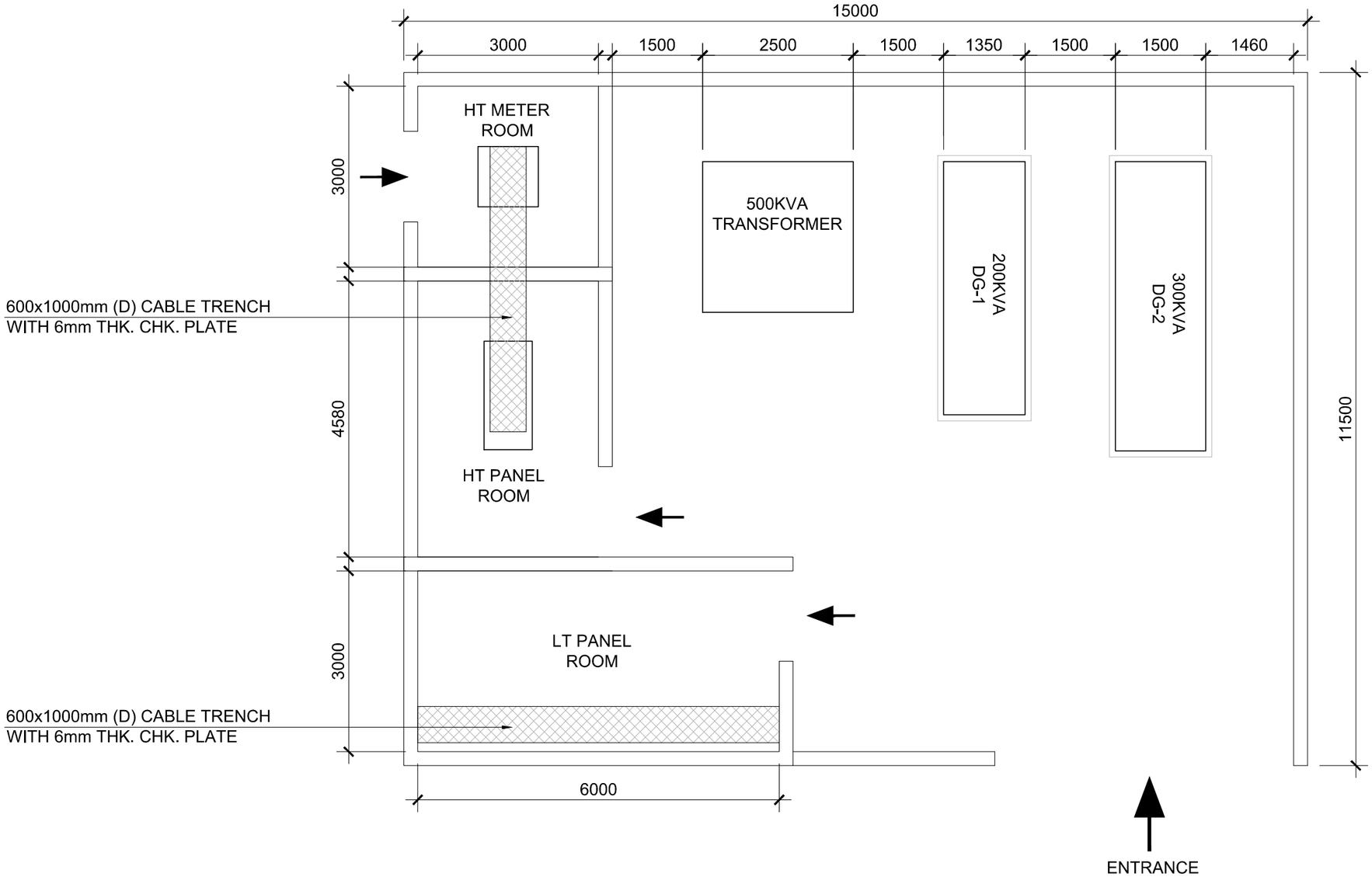

NOTES:

1. DO NOT SCALE THE DRAWING, FOLLOW ONLY FIGURED DIMENSIONS.
2. ALL DIMENSIONS GIVEN IN THIS DRAWING ARE IN MILLIMETERS UNLESS NOTED OTHERWISE.
3. ALL DIMENSIONS TO BE VERIFIED ON SITE AND APPROVED BY THE SITE ENGINEER.
4. ANY DISCREPANCY OR AMBIGUITY IN THE DRAWINGS SHOULD IMMEDIATELY BE BROUGHT TO NOTICE OF THE ARCHITECT.
5. ALL DRAWINGS SHOULD BE READ IN CONJUNCTION WITH OTHER RELEVANT ARCHITECTURAL, STRUCTURAL, PLUMBING, MECHANICAL AND ELECTRICAL DRAWINGS.
6. THE ± 0 REFERS TO LEVEL ESTABLISHED AT SITE IN PRESENCE OF THE SITE SUPERVISOR AND THE ARCHITECT. ALL REMAINING LEVELS ARE RELATIVE TO THIS LEVEL.
7. THIS DRAWING IS THE COPYRIGHT OF ARCHOHM CONSULTS AND MUST NOT BE RETAINED, COPIED OR USED WITHOUT THEIR AUTHORITY.

REVISIONS

No.	Date	Descriptions	Revision by

ASSTT. ARCHITECT PLANNER	
ARCHITECT PLANNER-III	
CHIEF ARCHITECT & PLANNER	
HOUSING COMMISSIONER	

Client:

DIRECTORATE OF ARTS & CULTURE GOVERNMENT OF MEGHALAYA, (DAC)

Project:

TRIBAL RESEARCH INSTITUTE, MEGHALAYA

Architects:

ARCHOHM ARCHITECTURE ENGINEERING URBANISM INTERIORS

c-28c, sector-6, noida - 201301 (up)
t 91 120 46 40 300
f 91 120 42 46 788
mail@archohm.com
www.archohm.com

Structural Consultants:
TPC TECHNICAL PROJECTS CONSULTANTS PVT. LTD.
H.O.: B-74, Sector-57(Opp Park Plaza)
Noida-201301
Ph.:+91-120-4306800, 4306801

PHE Consultants:
TECHNO ENGINEERING CONSULTANTS
Sector-A, 35-d Vaishali extension
new delhi-110014, telefax 26344668
e-mail:- ssb_tec@yahoo.co.in, tec@bol.net.in

HVAC Consultants:
ABID HUSAIN CONSULTANTS
LG-1&2, jeevan prakash apartment,16a, pkhla, new delhi-110025
TEL:- +91-11-26322935 ,FAX: +91-11-26319642
Email: info@ahcon.in

Electrical Consultants:
ARCHOHM
c-28c, sector 6, noida - 201301 (up)
t. 91 120 46 40 300, f. 91 120 42 46 788
mail@archohm.com, www.archohm.com

Environmental Consultants:
##

Landscape Architect:
##

Drawn By	DK
Checked By	AKD
Design By	SPG

TENDER DRAWING

Sheet Title: EQUIPMENT LAYOUT SUBSTATION BLOCK

N

Date:	Scale:	Project No.:
07-10-2020	1:75	AO-19-011

Drawing No.: E-TRI-SP-01-03 | E | R0

STRUCTURAL TENDER DRAWINGS

THIS PAGE IS INTENTIONALLY LEFT BLANK

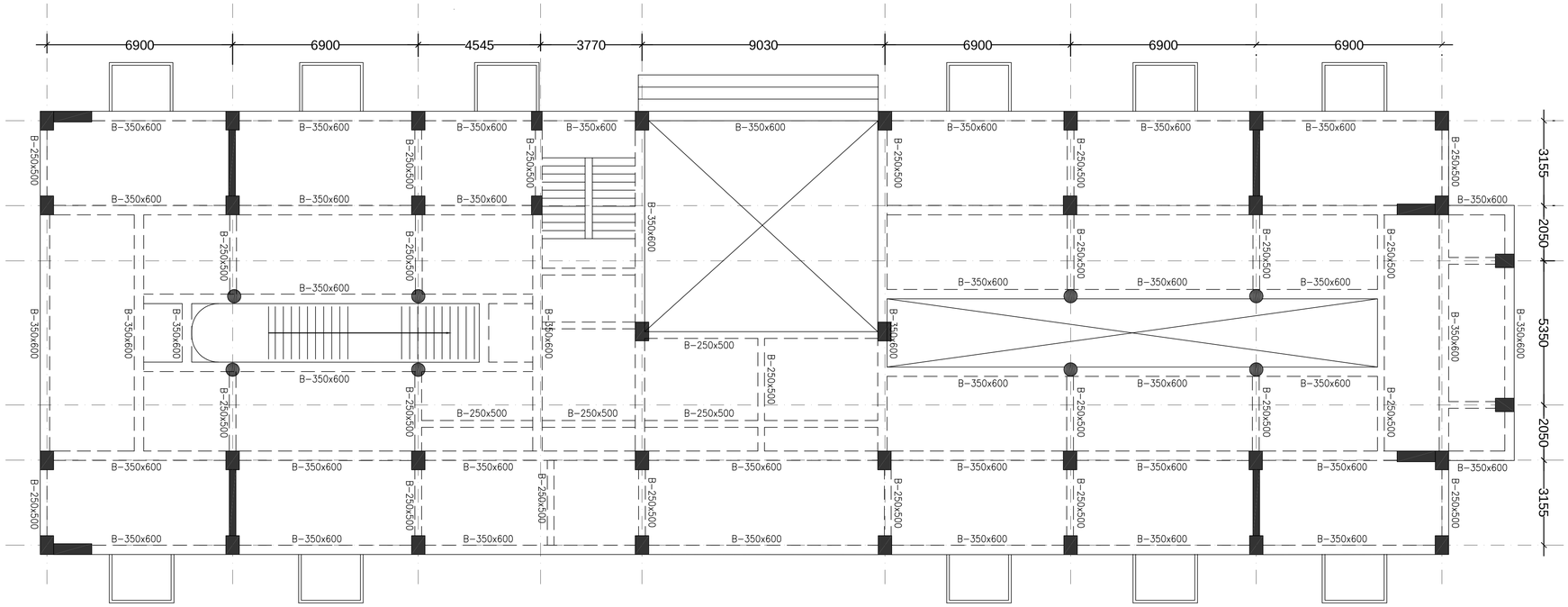

NOTES

- Dimensions are not to be scaled.
- All Dimensions are in Millimeters unless stated otherwise.
- The contractor shall verify all dimensions, details,specifications & site conditions & shall report any error, omission and/or anomaly to the Campus Designer before commencement of work.
- For construction purposes, the dimensions shall not be measured directly of the drawings. The drawings shall not be used for construction until they are issued for construction.
- These drawings are to be read in co-ordination with HVAC, Electrical, Plumbing drawings & all relevant sections of specifications..
- All shop drawings should be provided to the Architects for approval.

TENDER DRAWINGS

REV.NO	DATE	DESCRIPTION

REVISIONS

PROJECT

TRIBAL RESEARCH INSTITUTE, MEGHALAYA

ARCHITECTS :

ARCHOHM
ARCHITECTURE ENGINEERING URBANISM INTERIORS
c-28c, sector-8,
noida - 201301 (up)
t 91 120 46 40 300
f 91 120 42 46 788
mail@archohm.com
www.archohm.com

STRUCTURAL CONSULTANTS

TPC TECHNICAL PROJECTS CONSULTANTS(P)LTD.
H.O- B-74, SECTOR 57, NOIDA
UTTAR PRADESH-201301(INDIA)
BOARD NO:-91-120-4306800
TPC
DESIGN & ENGINEERING * COST & QUALITY MANAGEMENT * RETROFITTING
GURGAON ▪ HYDERABAD ▪ NEWDELHI ▪ NOIDA

DRAWING TITLE :

TYPICAL FRAMING PLAN
HOSTEL BLOCK

PROJECT CODE	2020-032	REVISION
DATE :	17.10.2020	
DRAWN BY :	ARUN	R0
CHKD BY :	P.G.	DRAWING NO.
SCALE :	1:100	2020-032-TRI-S-T-H-01

HVAC TENDER DRAWINGS

THIS PAGE IS INTENTIONALLY LEFT BLANK

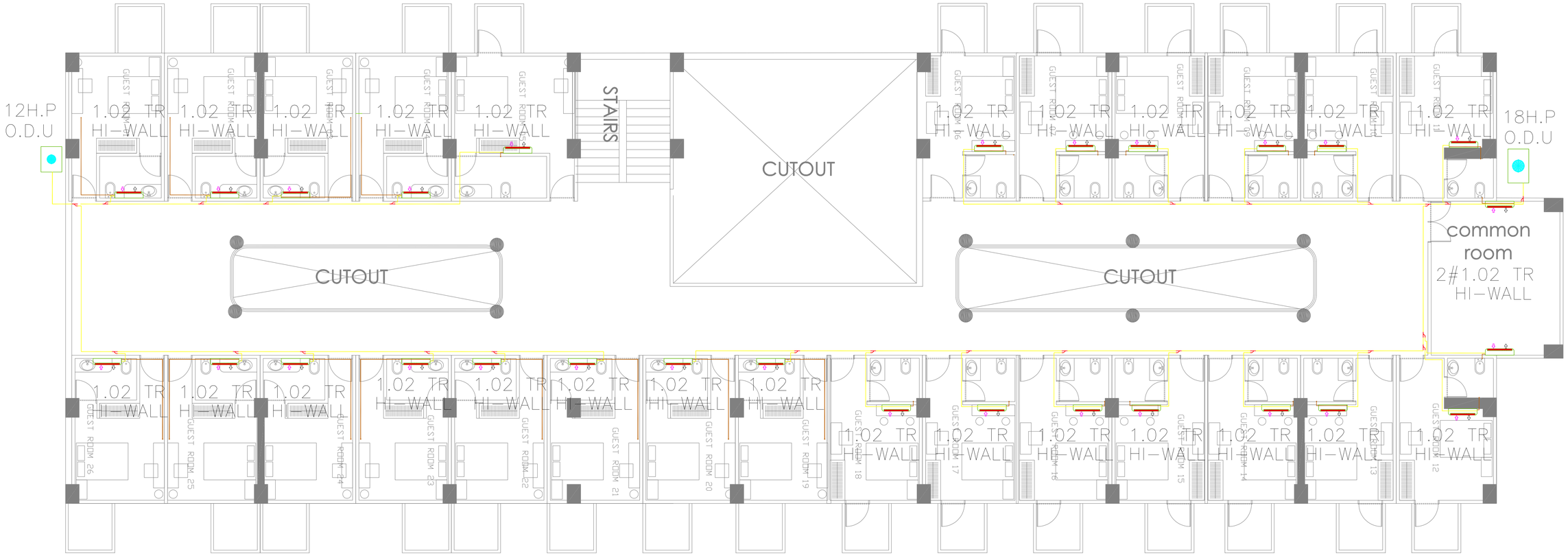

2 FIRST FLOOR PLAN

HOSTEL BLOCK

NOTES:

1. DO NOT SCALE THE DRAWING, FOLLOW ONLY FIGURED DIMENSIONS.
2. ALL DIMENSIONS GIVEN IN THIS DRAWING ARE IN MILLIMETERS UNLESS NOTED OTHERWISE.
3. ALL DIMENSIONS TO BE VERIFIED ON SITE AND APPROVED BY THE SITE ENGINEER.
4. ANY DISCREPANCY OR AMBIGUITY IN THE DRAWINGS SHOULD IMMEDIATELY BE BROUGHT TO NOTICE OF THE ARCHITECT.
5. ALL DRAWINGS SHOULD BE READ IN CONJUNCTION WITH OTHER RELEVANT ARCHITECTURAL, STRUCTURAL, PLUMBING, MECHANICAL AND ELECTRICAL DRAWINGS.
6. THE ± 0 REFERS TO LEVEL ESTABLISHED AT SITE IN PRESENCE OF THE SITE SUPERVISOR AND THE ARCHITECT. ALL REMAINING LEVELS ARE RELATIVE TO THIS LEVEL.
7. THIS DRAWING IS THE COPYRIGHT OF ARCHOHM CONSULTS AND MUST NOT BE RETAINED, COPIED OR USED WITHOUT THEIR AUTHORITY.

REVISIONS

No.	Date	Descriptions	Revision by

ASSTT. ARCHITECT PLANNER	
ARCHITECT PLANNER-III	
CHIEF ARCHITECT & PLANNER	
HOUSING COMMISSIONER	

Client:

DIRECTORATE OF ARTS & CULTURE GOVERNMENT OF MEGHALAYA, (DAC)

Project: **TRIBAL RESEARCH INSTITUTE, MEGHALAYA**

Architects:

ARCHOHM ARCHITECTURE ENGINEERING URBANISM INTERIORS

c-28c, sector-8, noida - 201301 (up)
t 91 120 46 40 300
f 91 120 42 46 788
mail@archohm.com
www.archohm.com

Structural Consultants:
TPC TECHNICAL PROJECTS CONSULTANTS PVT. LTD.
H.O.: B-74, Sector-57(Opp Park Plaza)
Noida-201303
Ph. +91-120-4306800, 4306801

HVAC Consultants:
ABID HUSAIN CONSULTANTS
LG-1&2, prevan prakash apartment,16a, okhla, new delhi-110025
TEL.: +91-11-26322935 ,FAX: +91-11-26319642
Email: info@ahcon.in

Environmental Consultants:
##

PHE Consultants:
TECHNO ENGINEERING CONSULTANTS
pocket-a, 30-d siddhartha extension new delhi-110014, telefax. 26344668
e-mail- ssb_tec@yahoo.co.in, tec@bol.net.in

Electrical Consultants:
ARCHOHM
c-28c, sector-8, noida - 201301 (up)
t: 91 120 46 40 300, f: 91 120 42 46 788
mail@archohm.com, www.archohm.com

Landscape Architect:
##

Drawn By	NR
Checked By	AN
Design By	SG

TENDER DRAWING

Sheet Title: HOSTEL BLOCK PLANS HVAC DRAWINGS

N

Date:	Scale:	Project No:-
07-10-2020	1:150	AO-19-011

Drawing No.: H-TRI-HB-01-01 A R0

PLUMBING TENDER DRAWINGS

THIS PAGE IS INTENTIONALLY LEFT BLANK

SITE PLAN

HOSTEL BLOCK

NOTES:

1. DO NOT SCALE THE DRAWING, FOLLOW ONLY FIGURED DIMENSIONS.
2. ALL DIMENSIONS GIVEN IN THIS DRAWING ARE IN MILLIMETERS UNLESS NOTED OTHERWISE.
3. ALL DIMENSIONS TO BE VERIFIED ON SITE AND APPROVED BY THE SITE ENGINEER.
4. ANY DISCREPANCY OR AMBIGUITY IN THE DRAWINGS SHOULD IMMEDIATELY BE BROUGHT TO NOTICE OF THE ARCHITECT.
5. ALL DRAWINGS SHOULD BE READ IN CONJUNCTION WITH OTHER RELEVANT ARCHITECTURAL, STRUCTURAL, PLUMBING, MECHANICAL, AND ELECTRICAL DRAWINGS.
6. THE ± 0 REFERS TO LEVEL ESTABLISHED AT SITE IN PRESENCE OF THE SITE SUPERVISOR AND THE ARCHITECT. ALL REMAINING LEVELS ARE RELATIVE TO THIS LEVEL.
7. THIS DRAWING IS THE COPYRIGHT OF ARCHOHM CONSULTS AND MUST NOT BE RETAINED, COPIED OR USED WITHOUT THEIR AUTHORITY.

REVISIONS

No.	Date	Descriptions	Revision by

ASSTT. ARCHITECT PLANNER	
ARCHITECT PLANNER-II	
CHIEF ARCHITECT & PLANNER	
HOUSING COMMISSIONER	

Client:

DIRECTORATE OF ARTS & CULTURE GOVERNMENT OF MEGHALAYA, (DAC)

Project: **TRIBAL RESEARCH INSTITUTE, MEGHALAYA**

Architects:

ARCHOHM ARCHITECTURE ENGINEERING URBANISM INTERIORS
c-28c, sector-8, noida - 201301 (up)
t 91 120 46 40 300
f 91 120 42 46 788
mail@archohm.com
www.archohm.com

Structural Consultants:
TPC TECHNICAL PROJECTS CONSULTANTS PVT. LTD.
H.O.: B-74, Sector-57(Opp Park Plaza)
Noida-201301
Ph.: +91-120-4306800, 4306801

PHE Consultants:
TECHNO ENGINEERING CONSULTANTS
pocket-a, 30-d siddhartha extension new delhi-110014, telefax: 26344668
e-mail:- stb_tec@yahoo.co.in, tec@bol.net.in

HVAC Consultants:
ABID HUSAIN CONSULTANTS
LG-1&2, jeevan prakash apartment,16a, okhla, new delhi-110025
TEL.: +91-11-26322935 ,FAX: +91-11-26319642
Email: info@ahcon.in

Electrical Consultants:
ARCHOHM
c-28c, sector-8, noida - 201301 (up)
t 91 120 46 40 300, f 91 120 42 46 788
mail@archohm.com, www.archohm.com

Environmental Consultants:
##

Landscape Architect:
##

Drawn By	NR
Checked By	AN
Design By	SG

TENDER DRAWING

Sheet Title:
SITE PLAN
PLUMBING DRAWINGS

N

Date:	Scale:	Project No:-
07-10-2020	1:1000	AO-19-011

Drawing No.: P-TR-01-01 | A | R0

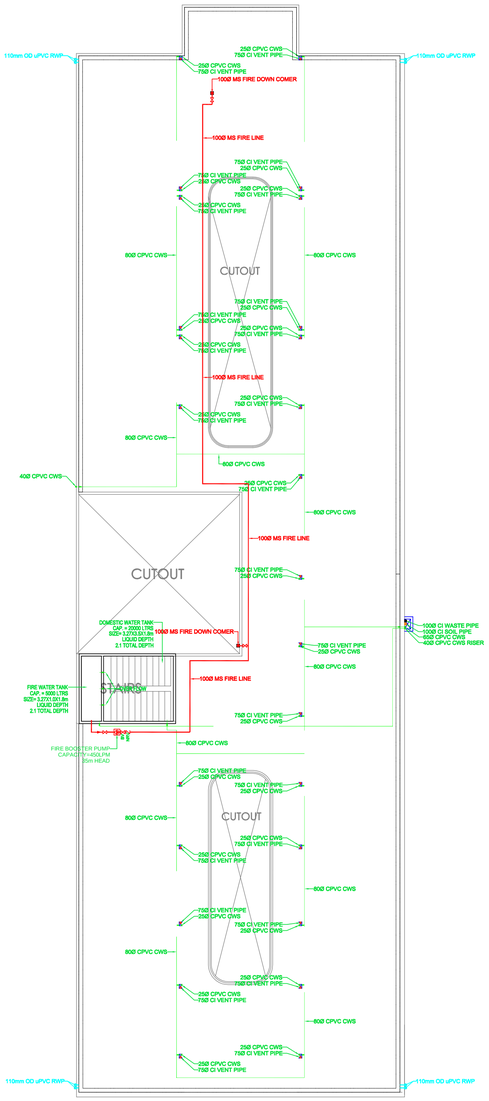

Terrace Plan

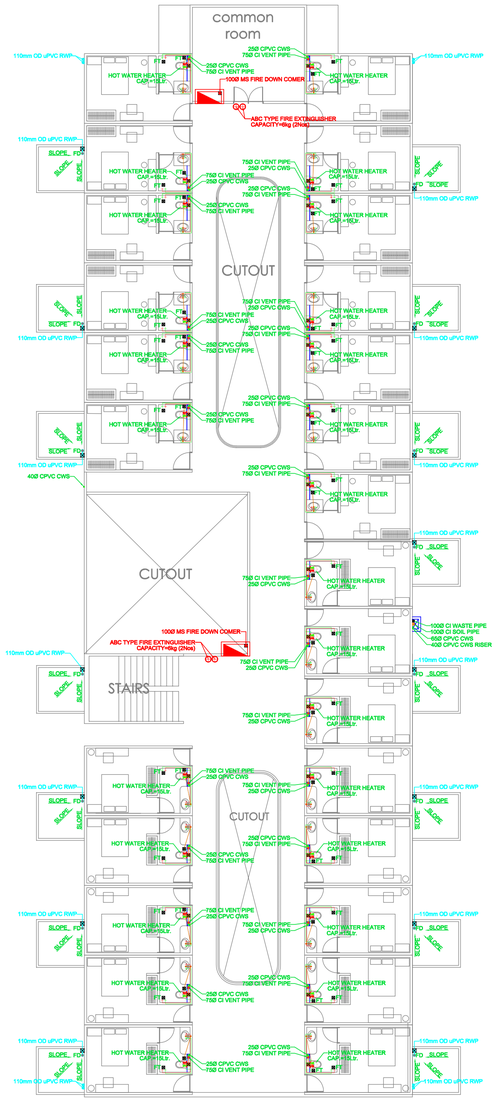

Ground floor
rooms - 13 nos.
studio - 13 nos

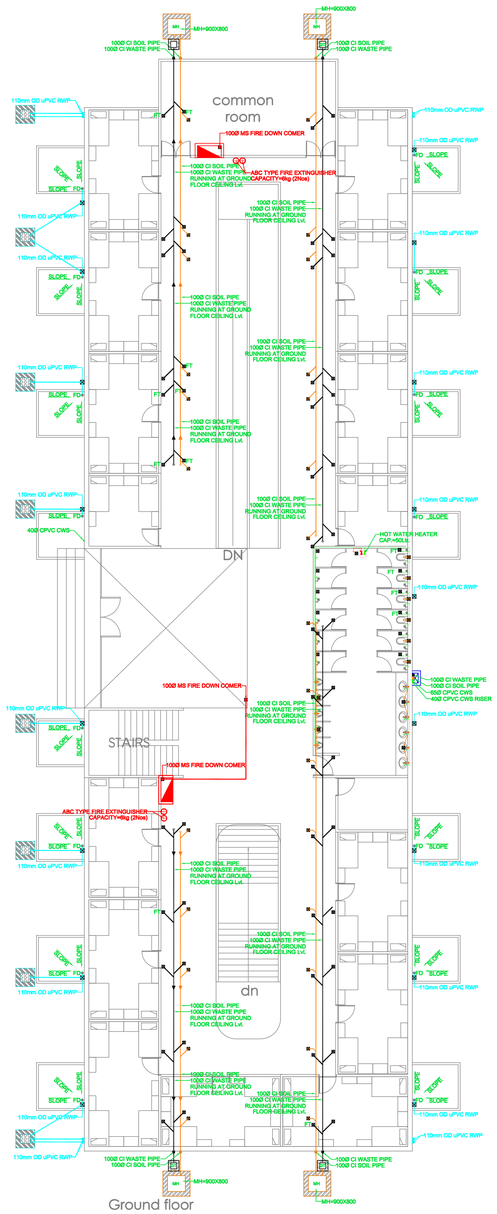

Ground floor
doms - 112 persons

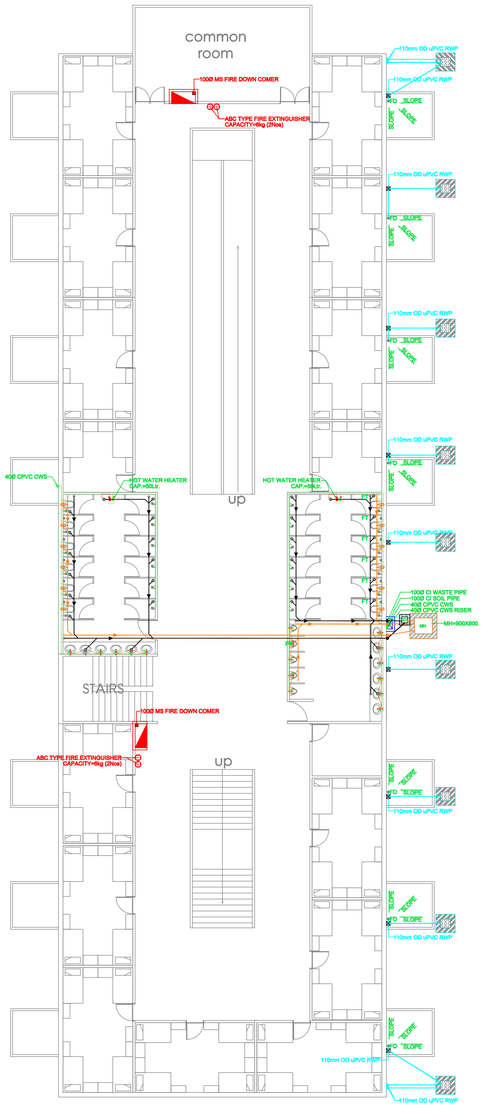

Lower ground floor
doms - 112 persons

1 TERRACE FLOOR PLAN
HOSTEL BLOCK

2 FIRST FLOOR PLAN
HOSTEL BLOCK

3 GROUND FLOOR PLAN
HOSTEL BLOCK

4 LOWER GROUND FLOOR
HOSTEL BLOCK

NOTES:

1. DO NOT SCALE THE DRAWING, FOLLOW ONLY FIGURED DIMENSIONS.
2. ALL DIMENSIONS GIVEN IN THIS DRAWING ARE IN MILLIMETERS UNLESS NOTED OTHERWISE.
3. ALL DIMENSIONS TO BE VERIFIED ON SITE AND APPROVED BY THE SITE ENGINEER.
4. ANY DISCREPANCY OR AMBIGUITY IN THE DRAWINGS SHOULD IMMEDIATELY BE BROUGHT TO NOTICE OF THE ARCHITECT.
5. ALL DRAWINGS SHOULD BE READ IN CONJUNCTION WITH OTHER RELEVANT ARCHITECTURAL, STRUCTURAL, PLUMBING, MECHANICAL AND ELECTRICAL DRAWINGS.
6. THE ± 0 REFERS TO LEVEL ESTABLISHED AT SITE IN PRESENCE OF THE SITE SUPERVISOR AND THE ARCHITECT. ALL REMAINING LEVELS ARE RELATIVE TO THIS LEVEL.
7. THIS DRAWING IS THE COPYRIGHT OF ARCHOHM CONSULTS AND MUST NOT BE RETAINED, COPIED OR USED WITHOUT THEIR AUTHORITY.

REVISIONS

No.	Date	Descriptions	Revision by

ASSTT. ARCHITECT PLANNER

ARCHITECT PLANNER-II

CHIEF ARCHITECT & PLANNER

HOUSING COMMISSIONER

Client:

DIRECTORATE OF ARTS & CULTURE GOVERNMENT OF MEGHALAYA, (DAC)

Project: **TRIBAL RESEARCH INSTITUTE, MEGHALAYA**

Architects:

ARCHOHM ARCHITECTURE ENGINEERING URBANISM INTERIORS

c-28c, sector-8, noida - 201301 (up)
t 91 120 46 40 300
f 91 120 42 46 788
mail@archohm.com
www.archohm.com

Structural Consultants:
TPC TECHNICAL PROJECTS CONSULTANTS PVT. LTD.
H.O.: B-74, Sector-57(Opp Park Plaza)
Noida-201301
Ph.: +91-120-4306800, 4306801

PHE Consultants:
TECHNO ENGINEERING CONSULTANTS
pocket-a. 30-d siddhartha extension new delhi-110014, telefax: 26344668
e-mail- sstb_tec@yahoo.co.in, tec@bol.net.in

HVAC Consultants:
ABID HUSAIN CONSULTANTS
LG-1&2, jeevan prakash apartment,16a, okhla, new delhi-110025
TEL.: +91-11-26322935 ,FAX: +91-11-26319642
Email: info@ahcon.in

Electrical Consultants:
ARCHOHM
c-28c, sector-8, noida - 201301 (up)
T: 91 120 46 40 300, f: 91 120 42 46 788
mail@archohm.com, www.archohm.com

Environmental Consultants:
##

Landscape Architect:
##

Drawn By	NR
Checked By	AN
Design By	SG

TENDER DRAWING

Sheet Title: HOSTEL BLOCK PLANS PLUMBING DRAWINGS

N

Date:	Scale:	Project No:-
07-10-2020	1:150	AO-19-011

Drawing No.: P-TRI-HB-01-01 | A | R0